FlexiVent 1050125/90x2

Supply or exhaust ventilation systems of residential spaces. For distribution of air from the ventilation unit through the air ducts

• Casing material: Polypropylene



	Unit of measurement	FlexiVent 1050125/90x2
Connected air duct size	mm	90
Ambient air temperature min	°C	-20
Ambient air temperature max	°C	60

Dimensions

Ø D	Ø d	W
125	90	271

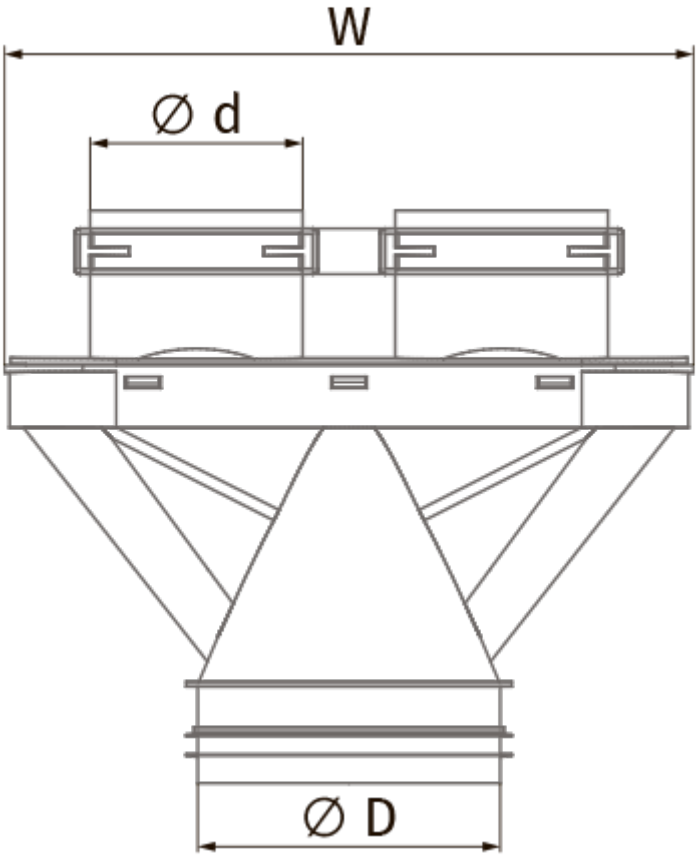
W
Ø d
Ø D