# FlexiVent 1050150/75x8

Supply or exhaust ventilation systems of residential spaces. For distribution of air from the ventilation unit through the air ducts

• Casing material: Polypropylene

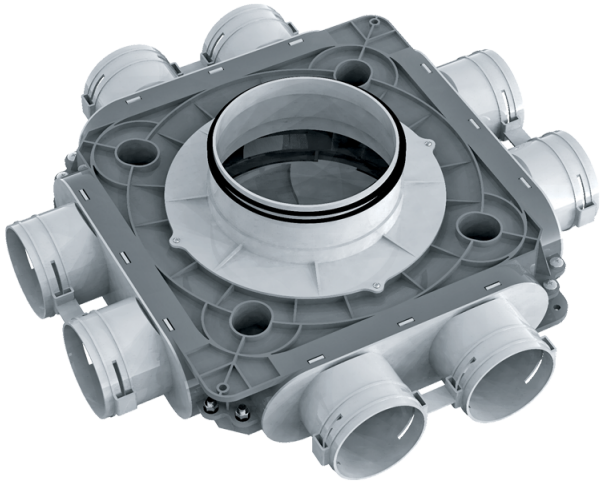

| | Unit of measurement | FlexiVent 1050150/75x8 |
|---|---|---|
| Connected air duct size | mm | 75 |
| Ambient air temperature max | °C | 60 |
| Ambient air temperature min | °C | -20 |

## Dimensions

| Ø d | H | L |
|---|---|---|
| 138 | 140 | 468 |

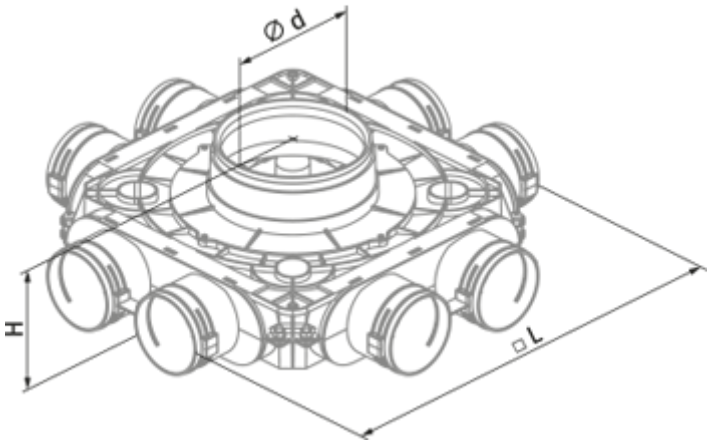
Ø d
H
□L