FlexiVent 1051200/63x18

Supply or exhaust ventilation systems of residential spaces. For distribution of air from the ventilation unit through the air ducts

• Casing material: Polypropylene

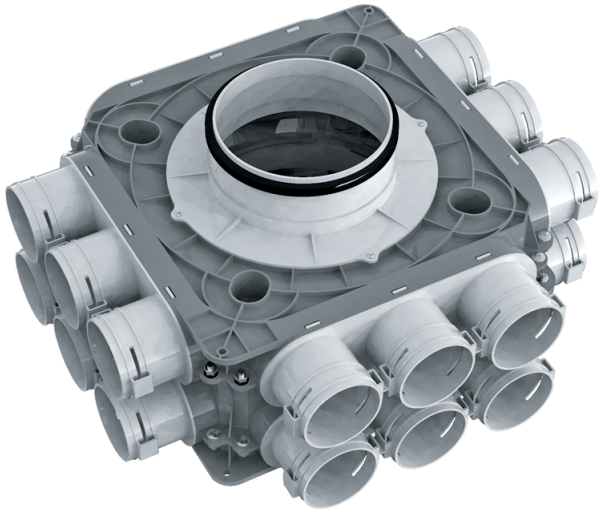

	Unit of measurement	FlexiVent 1051200/63x18
Connected air duct size	mm	63
Ambient air temperature min	°C	-20
Ambient air temperature max	°C	60

Dimensions

Ø d	H	L	W
188	223	464	408

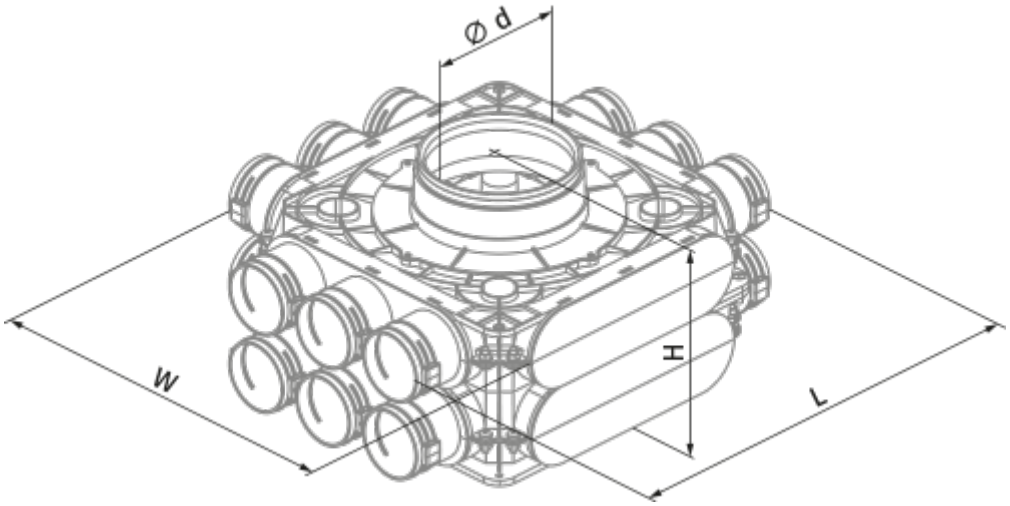
Ø d
W
H
L