FlexiVent 1054150/75x12

Supply or exhaust ventilation systems of residential spaces. For distribution of air from the ventilation unit through the air ducts

• Casing material: Polypropylene

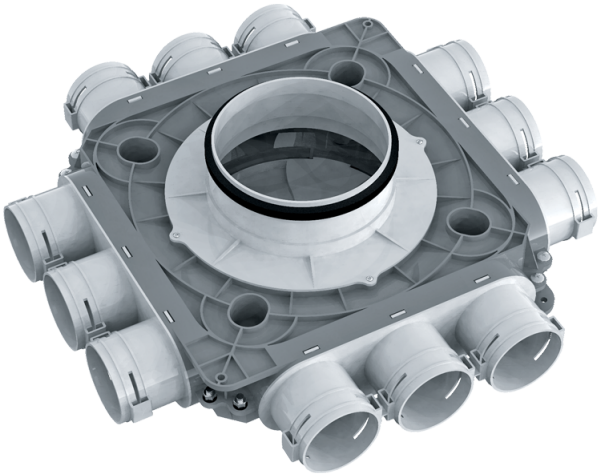

	Unit of measurement	FlexiVent 1054150/75x12
Connected air duct size	mm	75
Ambient air temperature max	°C	60
Ambient air temperature min	°C	-20

Dimensions

Ø d	H	L
138	140	468

