FlexiVent 1060160/52x8

Supply or exhaust ventilation systems of residential spaces. For distribution of air from the ventilation unit through the air ducts

• Casing material: Polypropylene

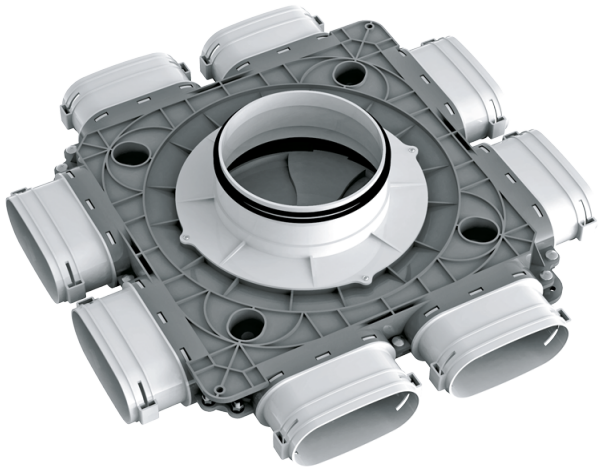

	Unit of measurement	FlexiVent 1060160/52x8
Connected air duct size	mm	52
Ambient air temperature max	°C	60
Ambient air temperature min	°C	-20

Dimensions

Ø D	H	L
159	121	488

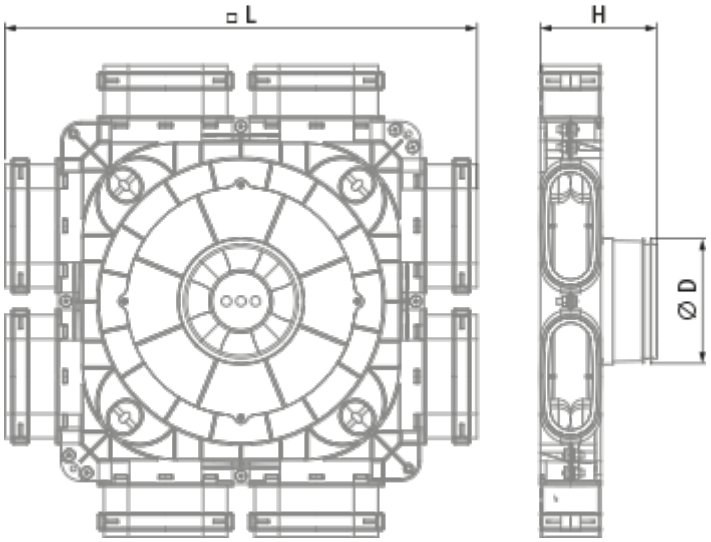
L
H
Ø D