GK-100

Airtight ventilation valve

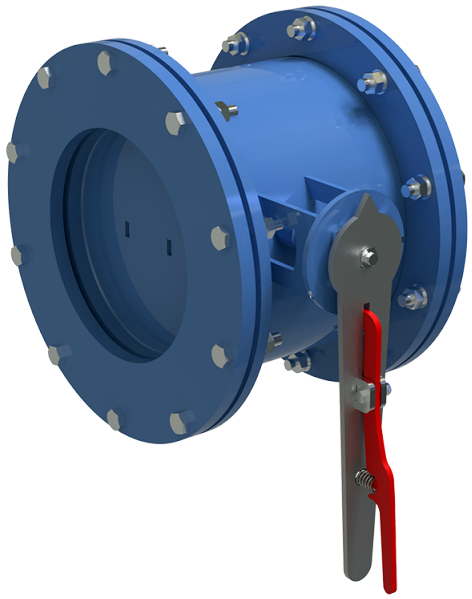

	Unit of measurement	GK-100
Connected air duct size	mm	100
Weight	kg	12

Dimensions

Dy	H	H1	B	L	Dk
100	205	293	123	268	185

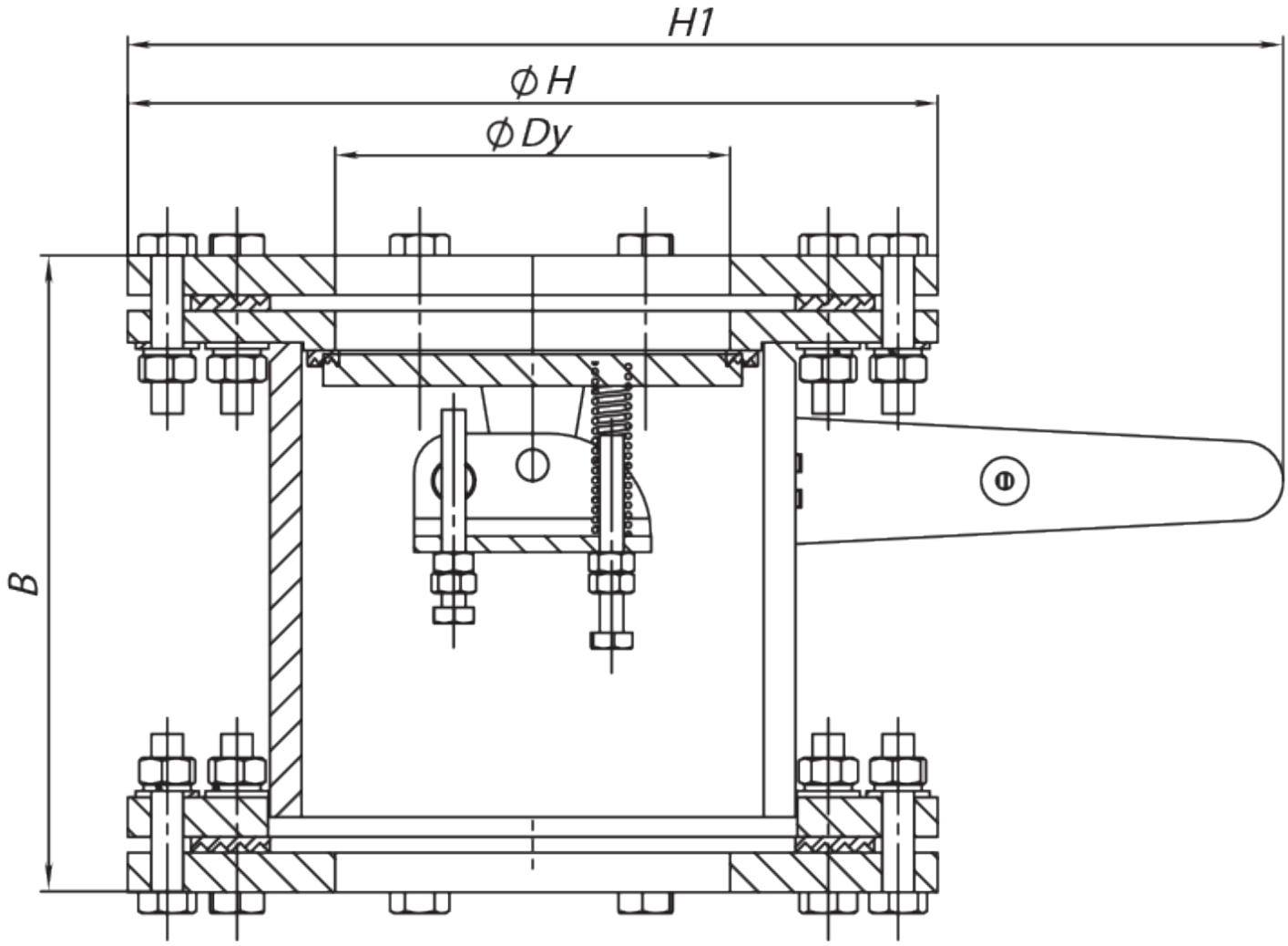
H1
ϕ H
ϕ Dy
B

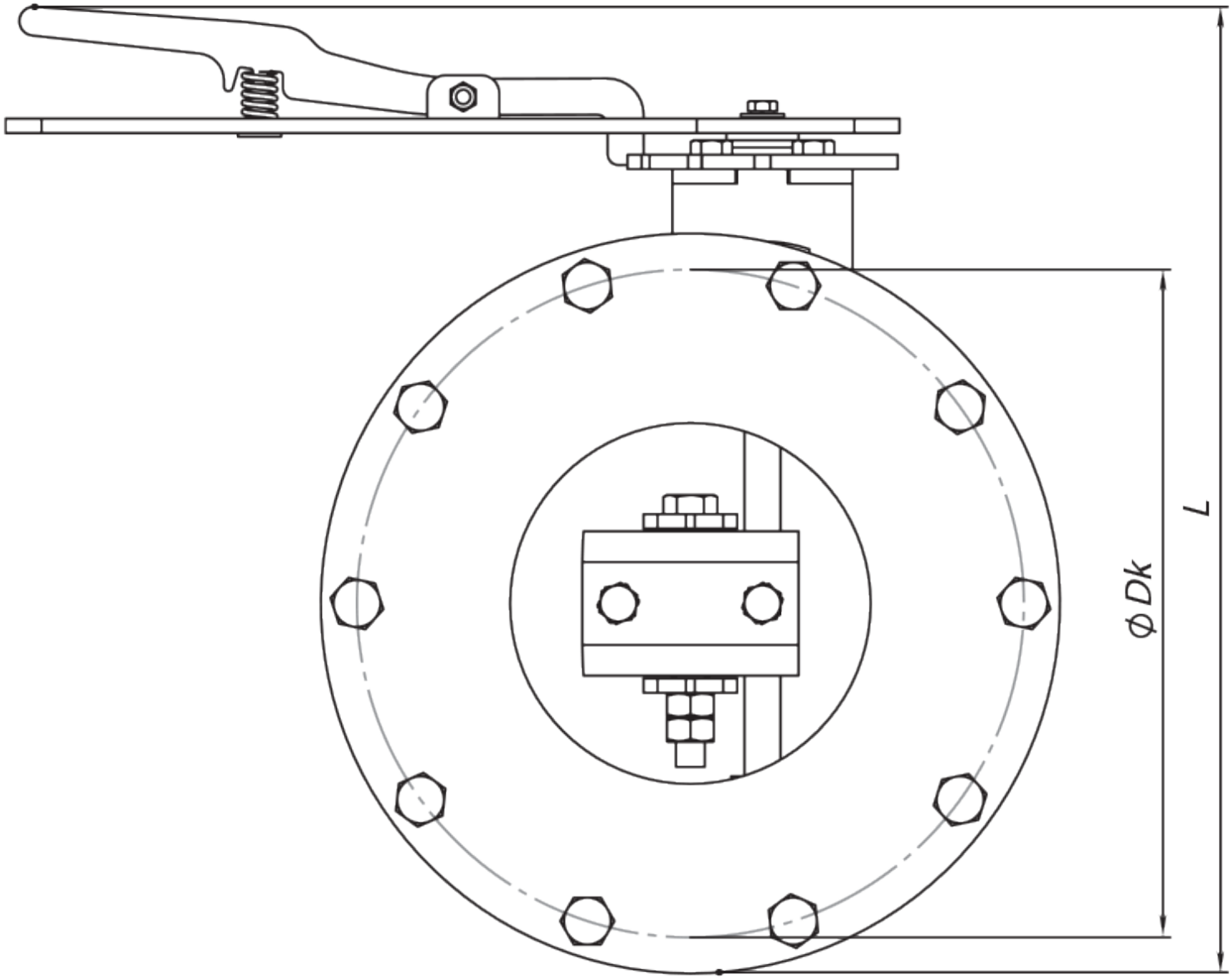
ϕ Dk
L