# GK-150

Airtight ventilation valve

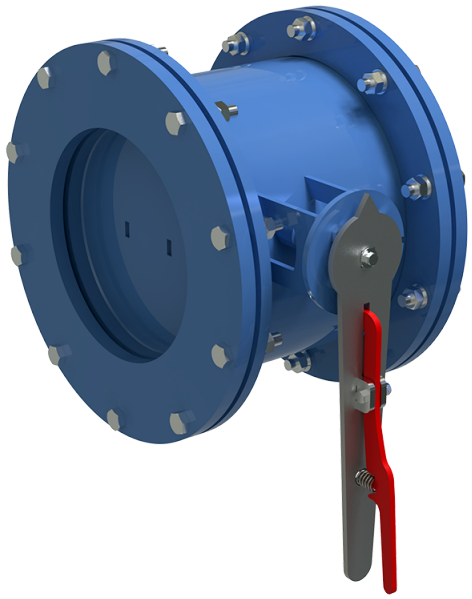

| | Unit of measurement | GK-150 |
|---|---|---|
| Connected air duct size | mm | 150 |
| Weight | kg | 17.5 |

## Dimensions

| Dy | H | H1 | B | L | Dk |
|---|---|---|---|---|---|
| 150 | 255 | 308 | 143 | 323 | 235 |

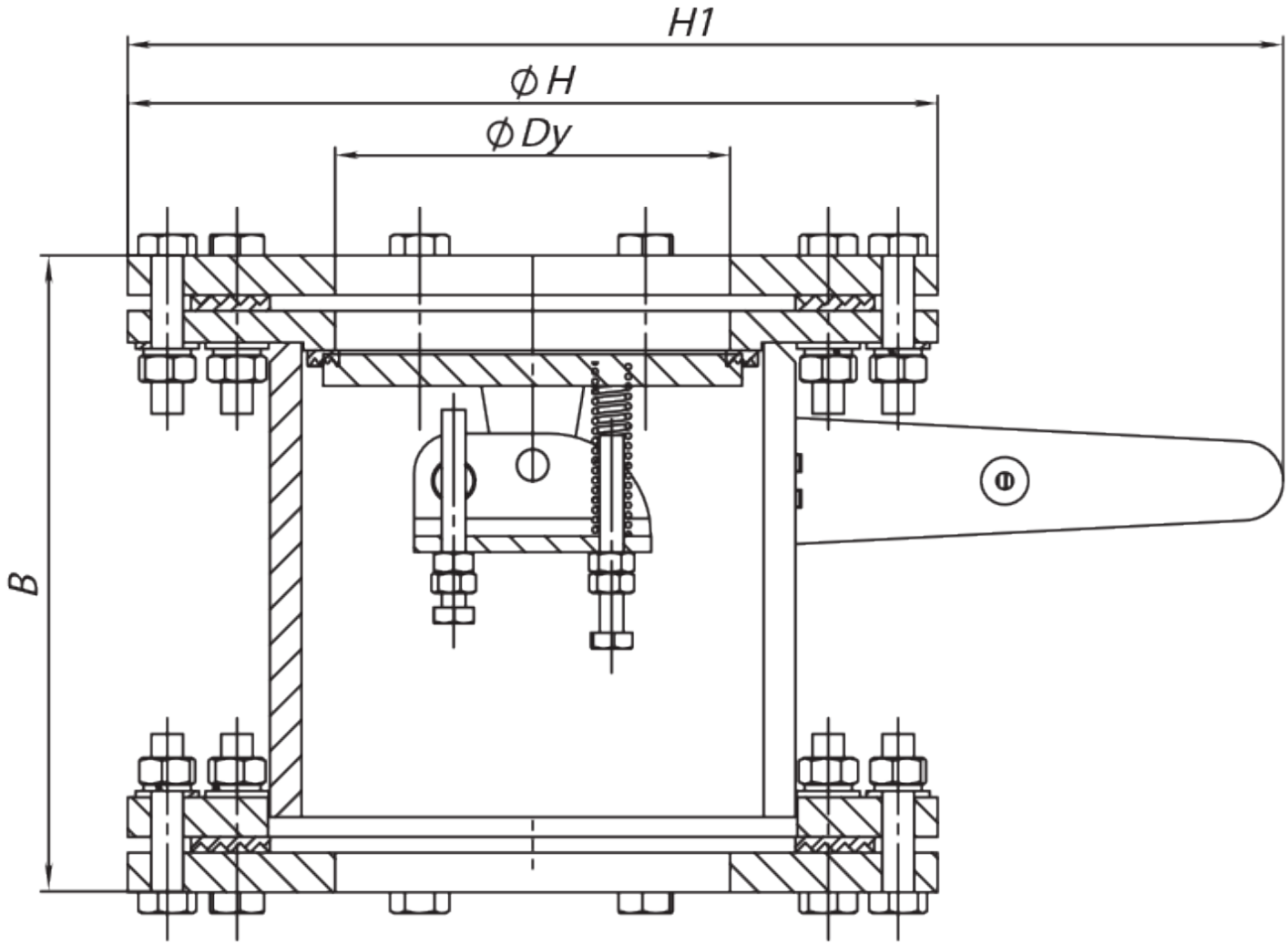
H1
ϕ H
ϕ Dy
B

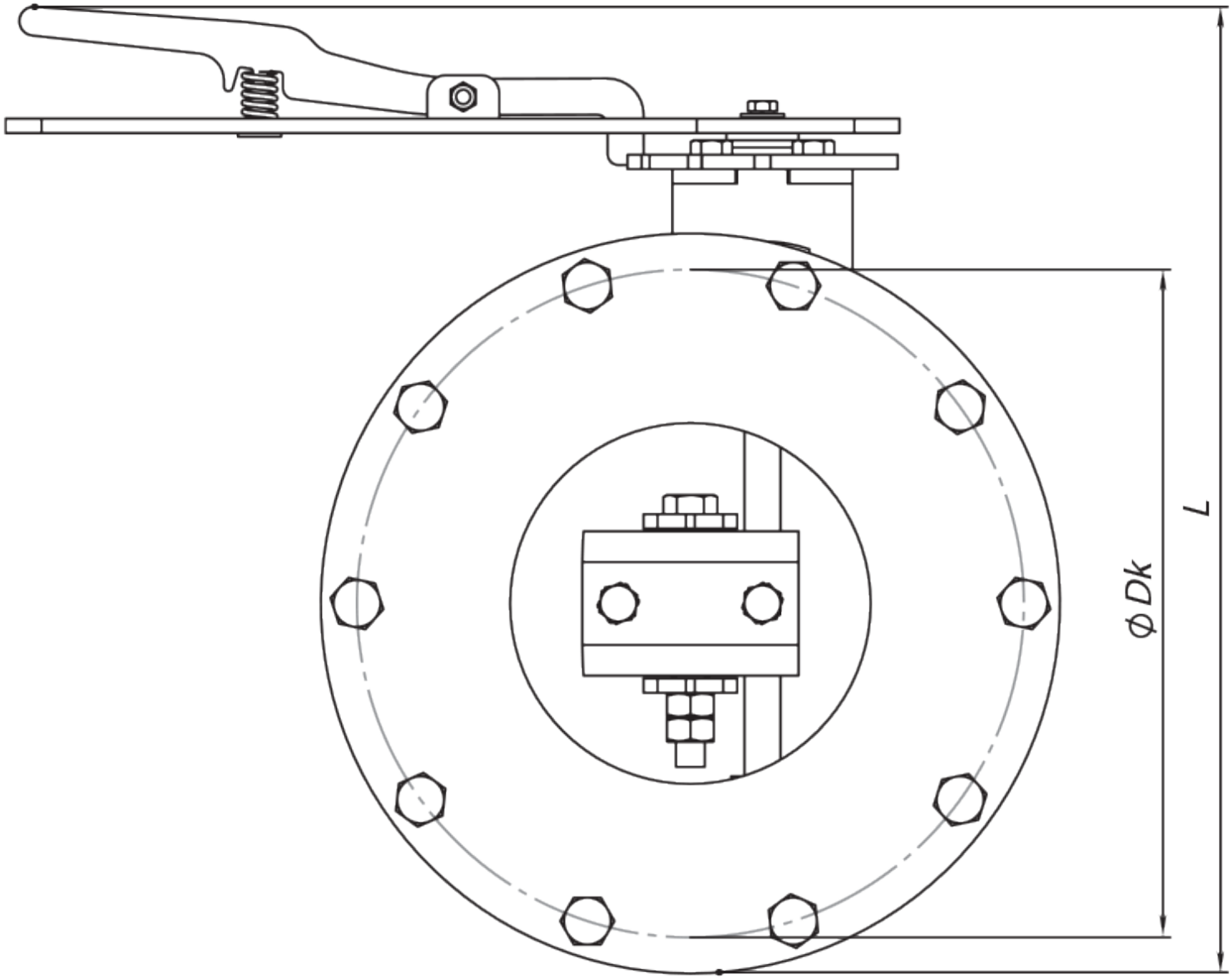
ϕ Dk
L