GK-200

Airtight ventilation valve

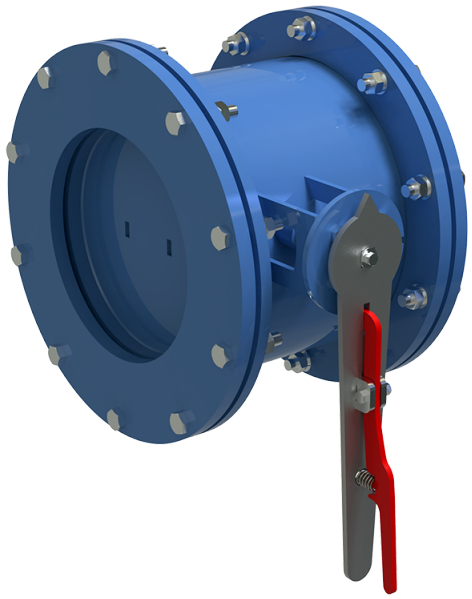

	Unit of measurement	GK-200
Connected air duct size	mm	200
Weight	kg	22.5

Dimensions

Dy	H	H1	B	L	Dk
200	305	325	165	374	275

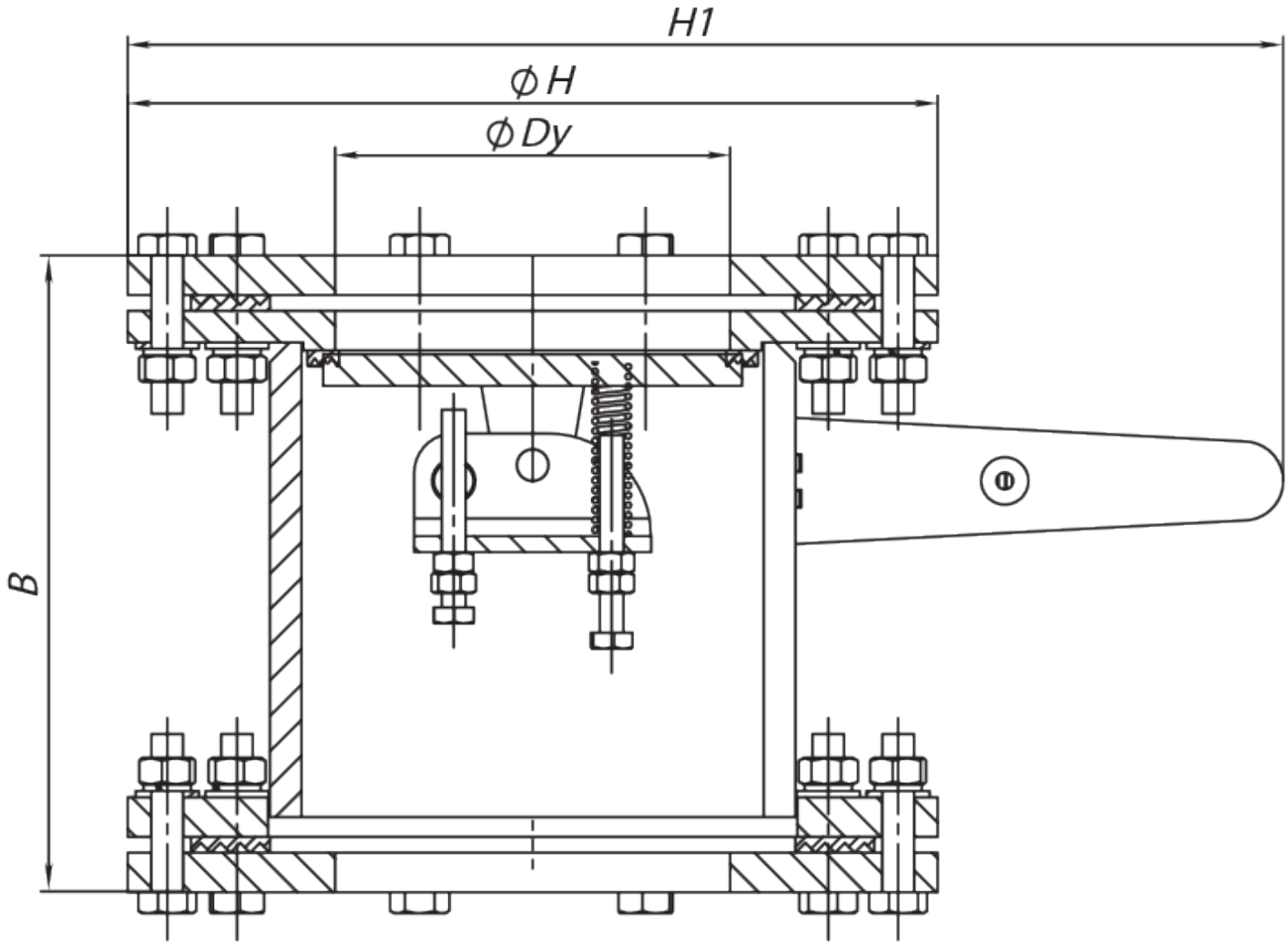
H1
ϕ H
ϕ Dy
B

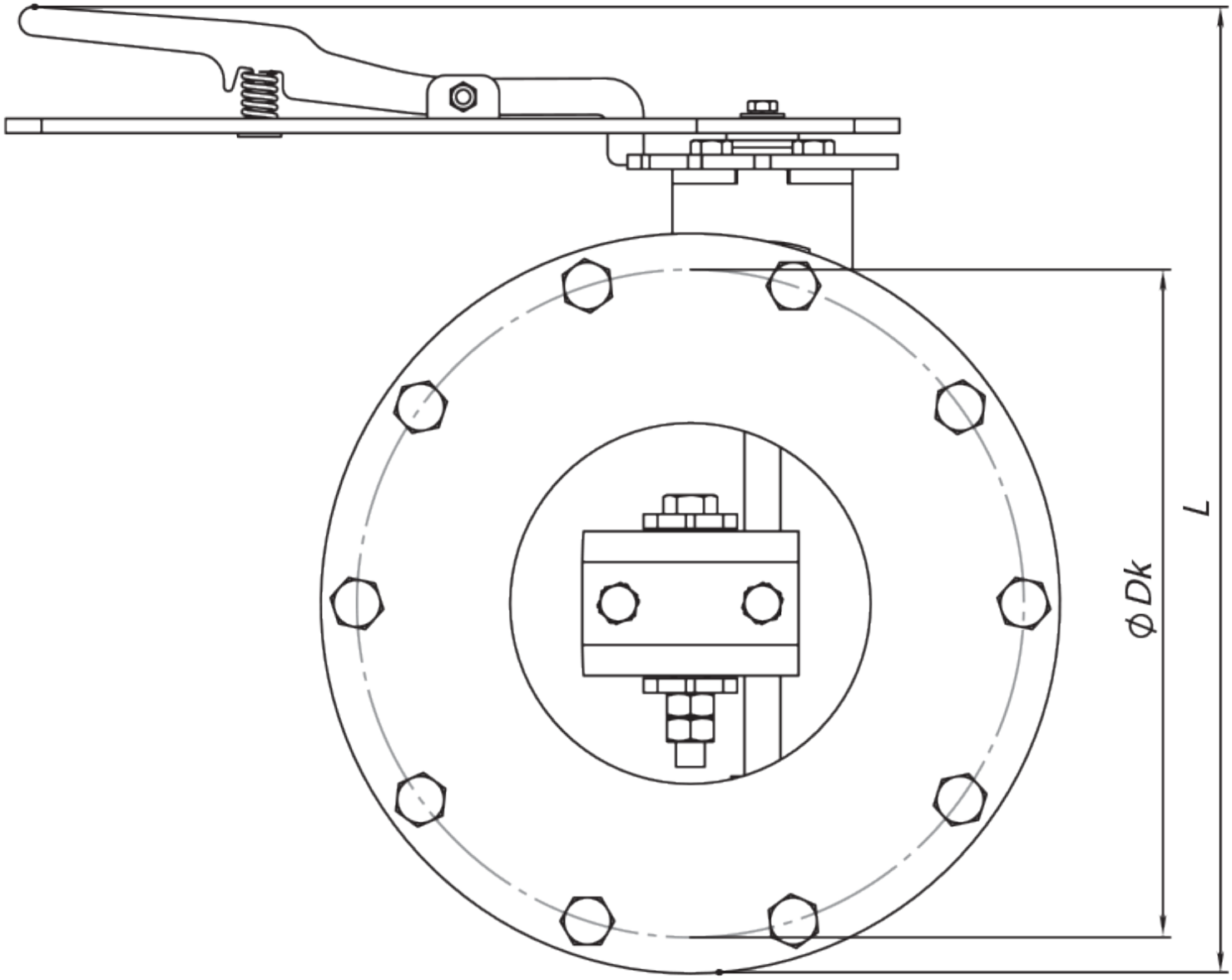
ϕ Dk
L