GK-225

Airtight ventilation valve

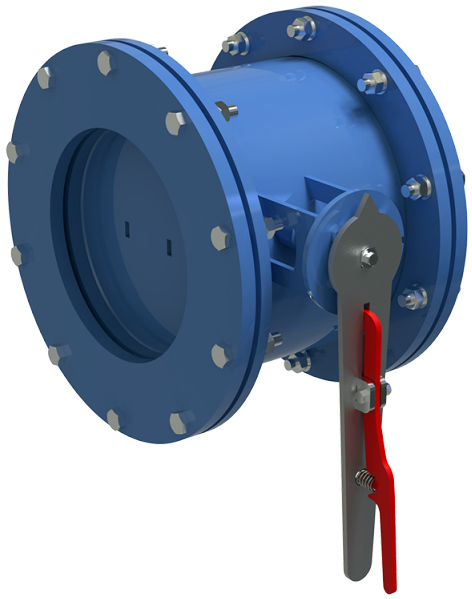

	Unit of measurement	GK-225
Connected air duct size	mm	225
Weight	kg	25.5

Dimensions

Dy	H	H1	B	L	Dk
225	330	355	175	398	300

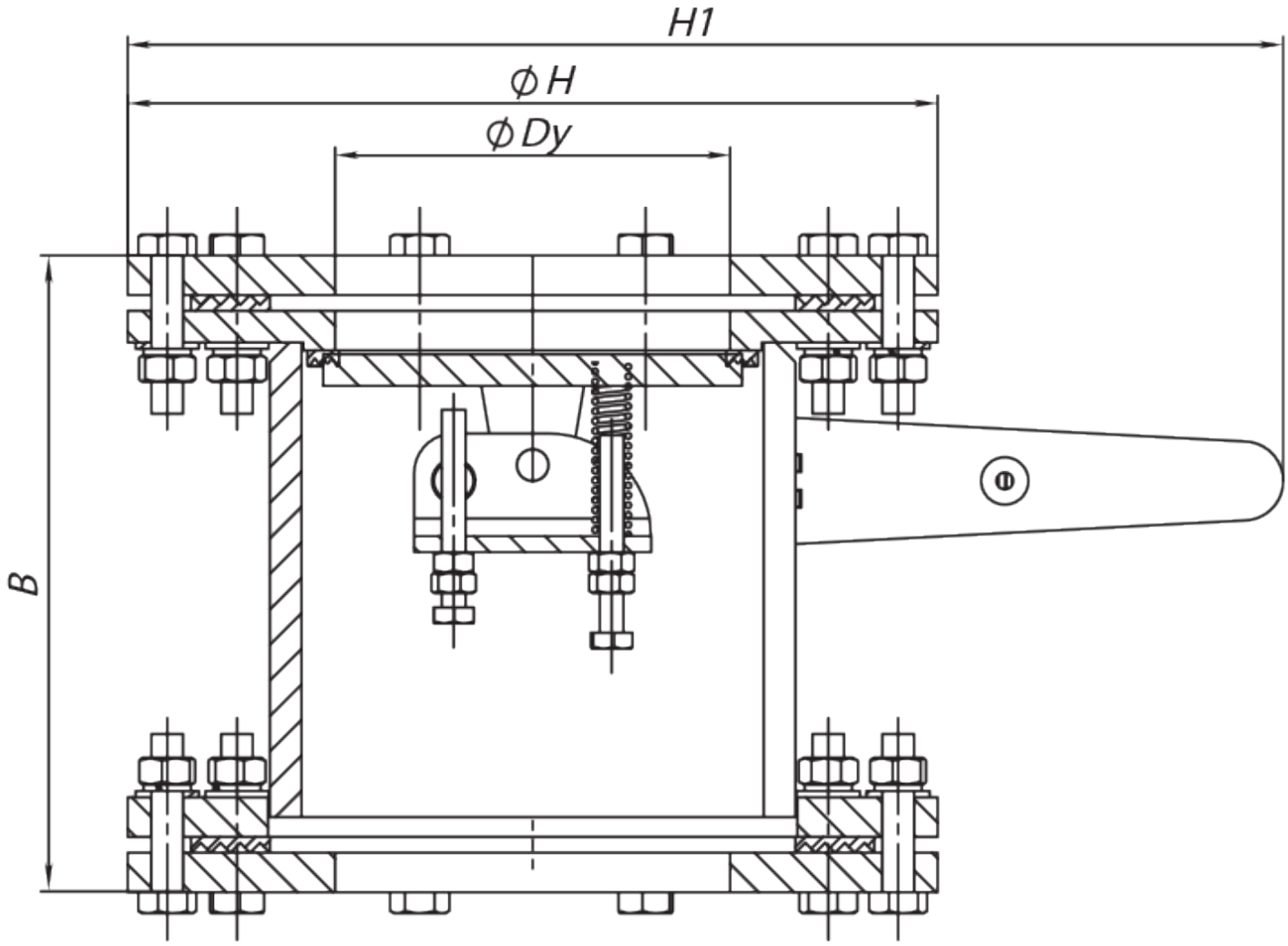
H1
ϕ H
ϕ Dy
B

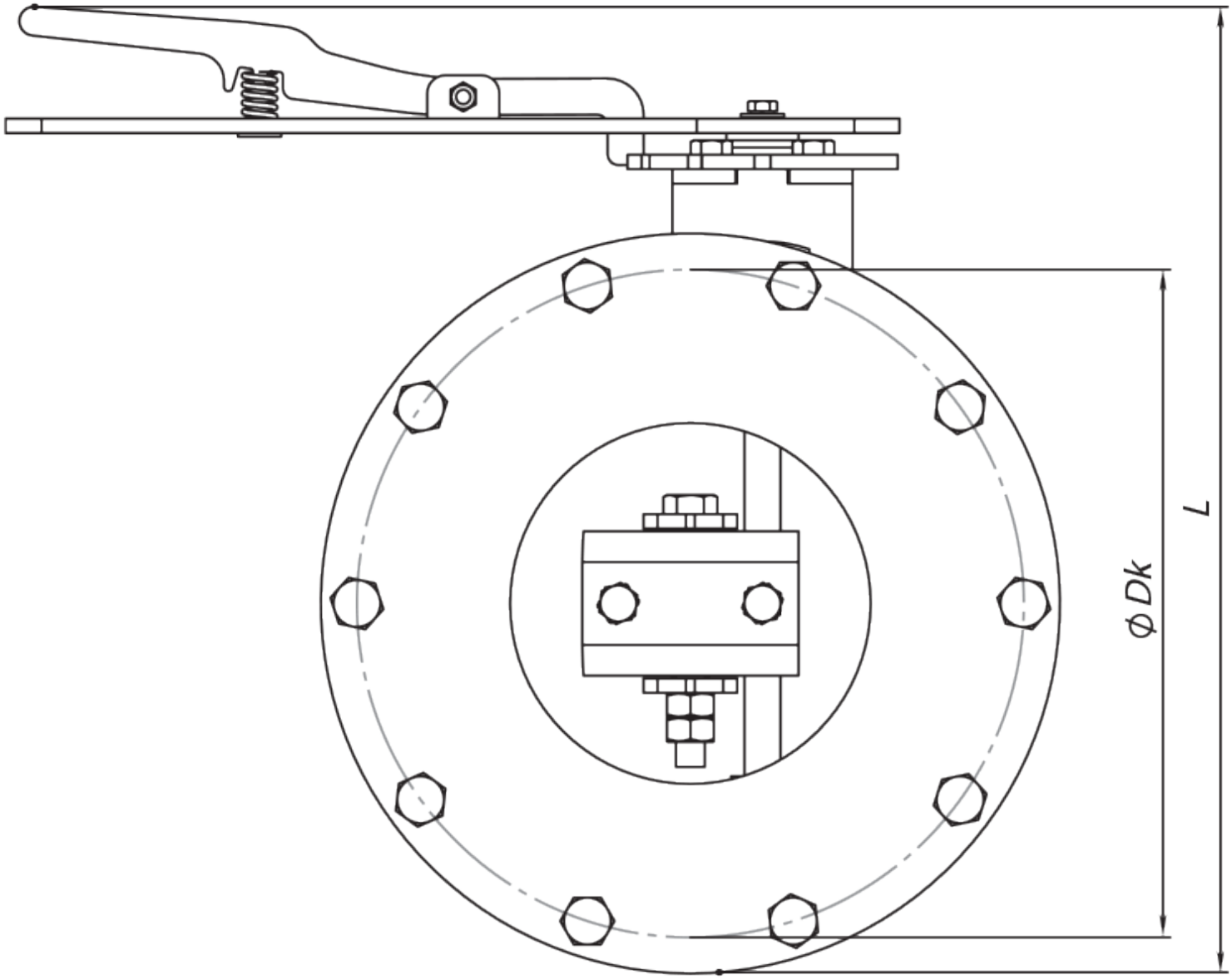
ϕ Dk
L