GK-250

Airtight ventilation valve

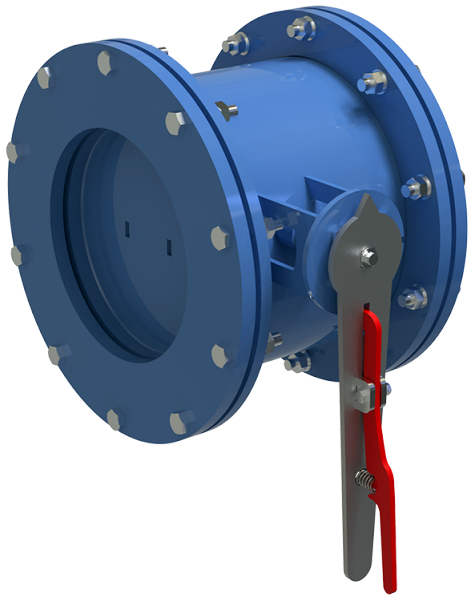

	Unit of measurement	GK-250
Connected air duct size	mm	250
Weight	kg	29

Dimensions

Dy	H	H1	B	L	Dk
250	355	367,5	185	423	325

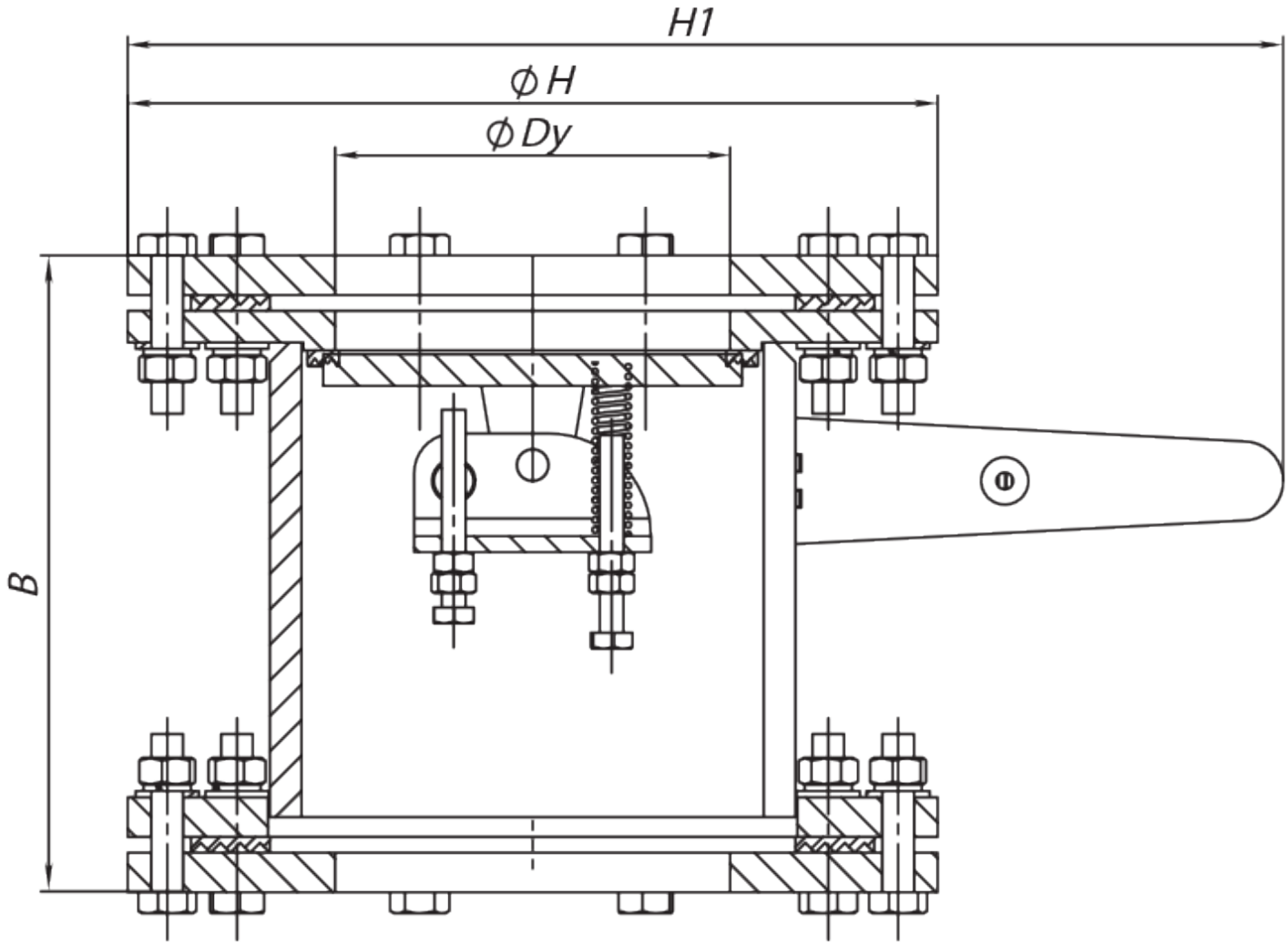
H1
ϕ H
ϕ Dy
B

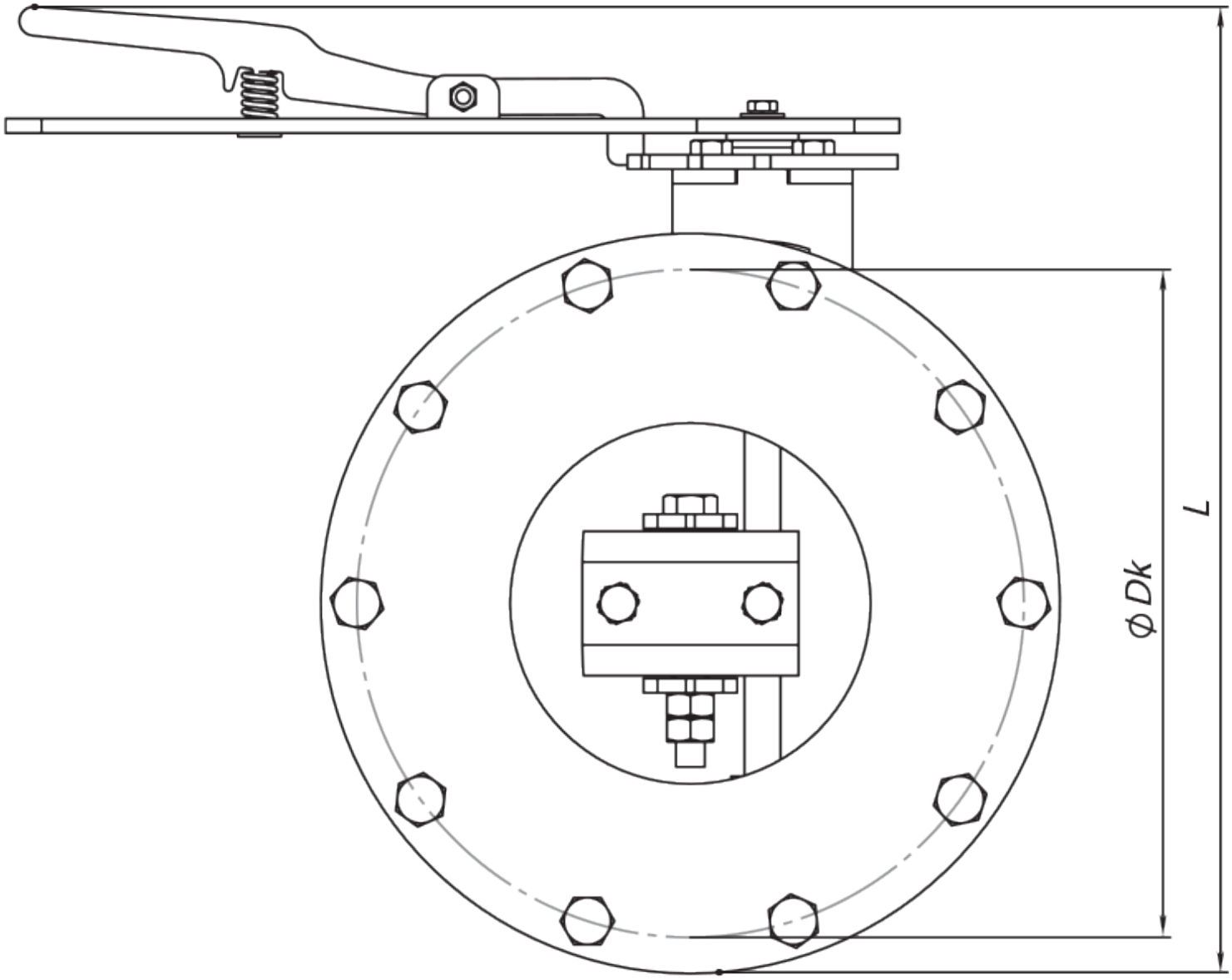
ϕ Dk
L