GK-300

Airtight ventilation valve

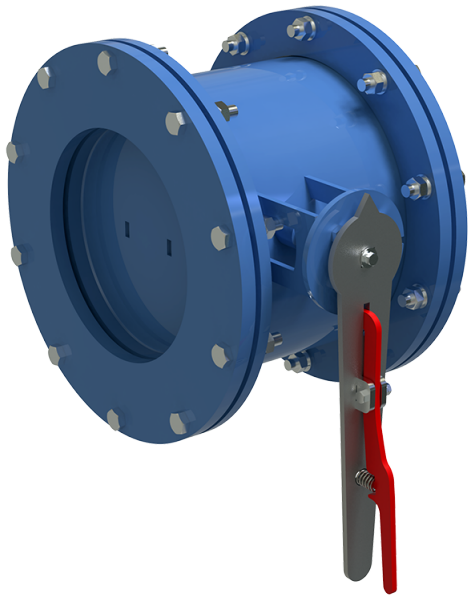

	Unit of measurement	GK-300
Connected air duct size	mm	300
Weight	kg	41

Dimensions

Dy	H	H1	B	L	Dk
300	430	-	205	487	400

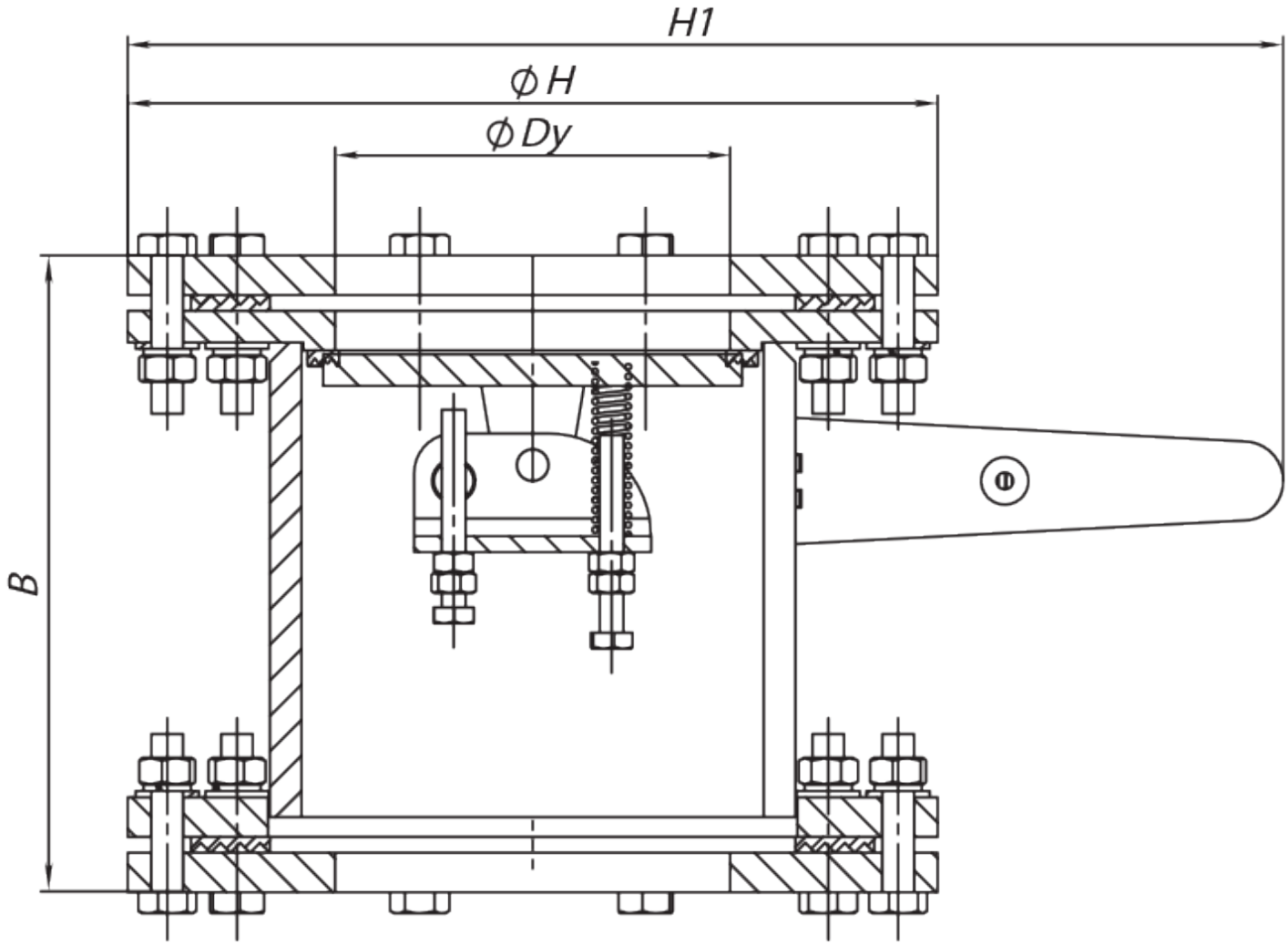
H1
ϕ H
ϕ Dy
B

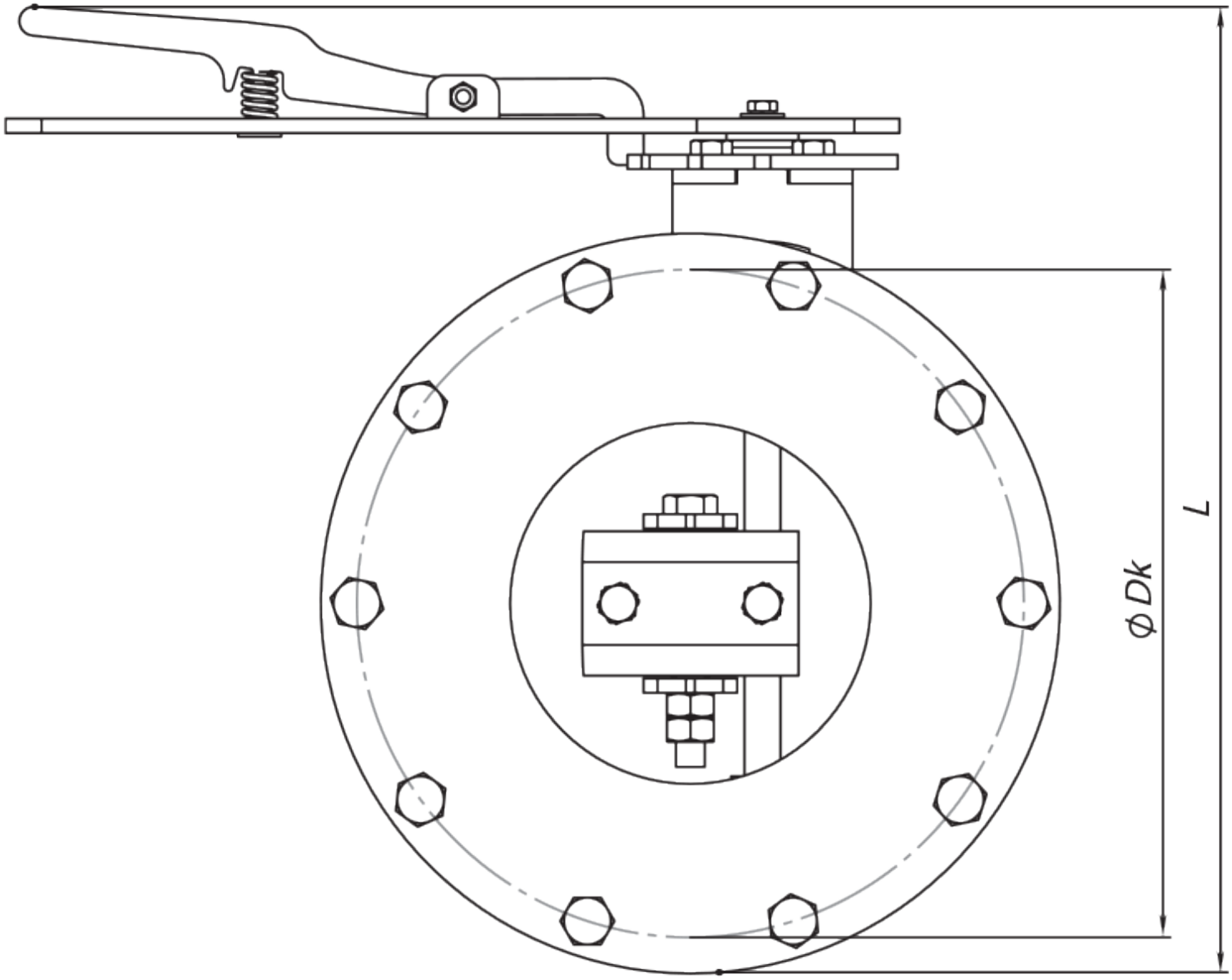
ϕ Dk
L