GK-315

Airtight ventilation valve

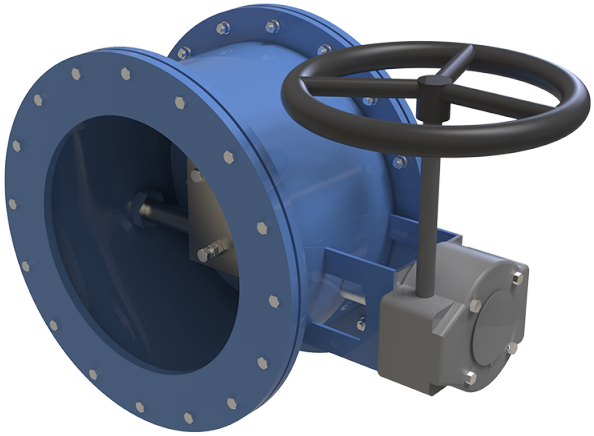

	Unit of measurement	GK-315
Connected air duct size	mm	315
Weight	kg	60.5

Dimensions

Dy	H	H1	B	L	Dk
315	460	470	236	718	420

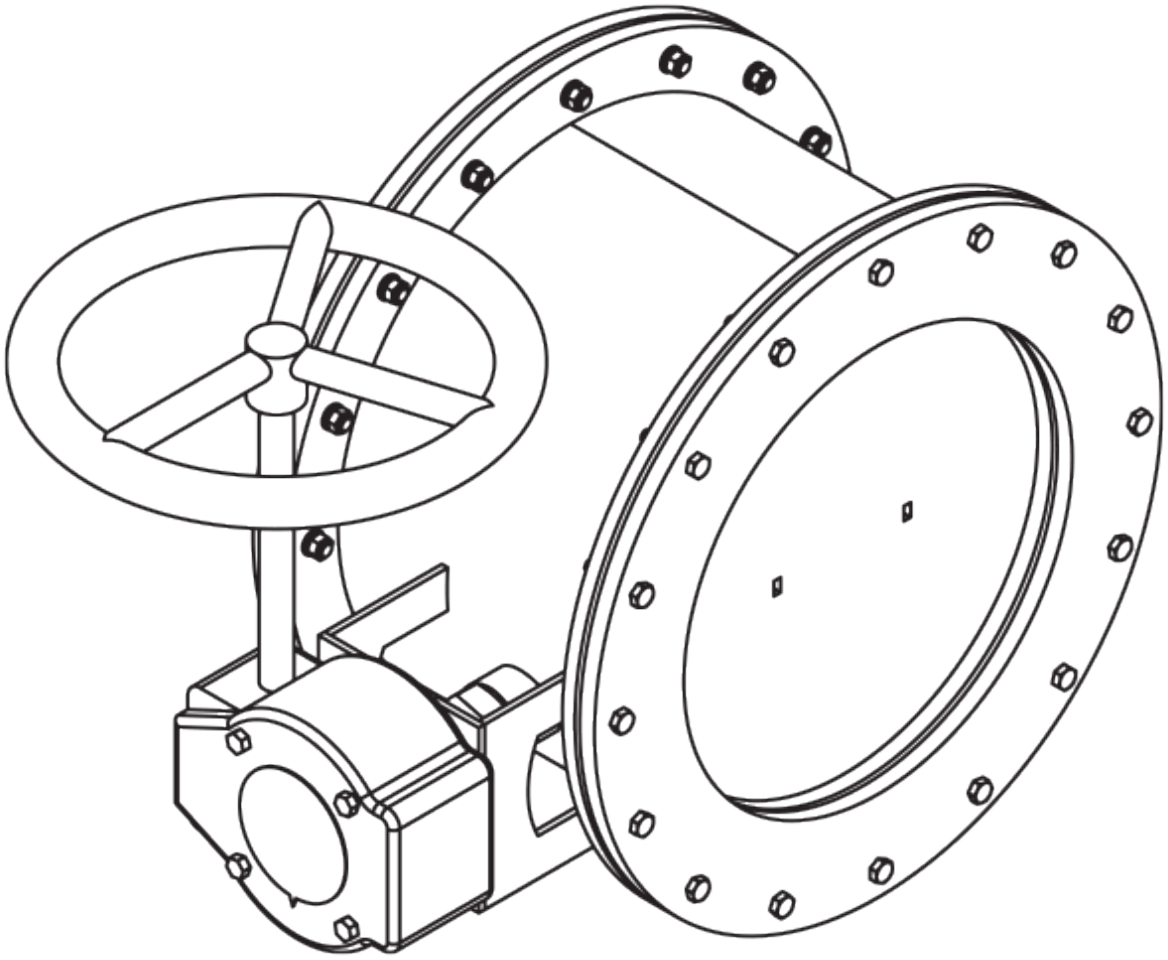

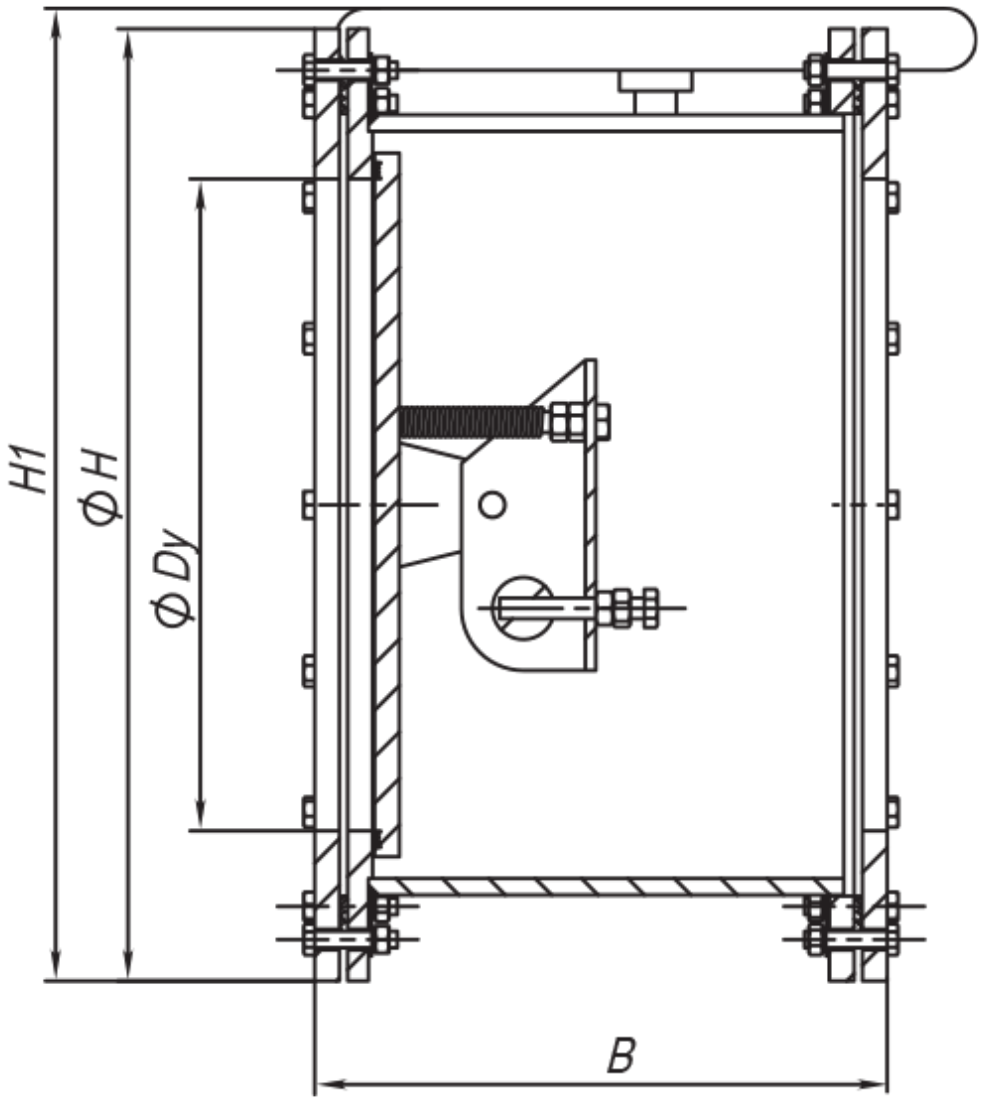
H1
ϕ H
ϕ Dy
B

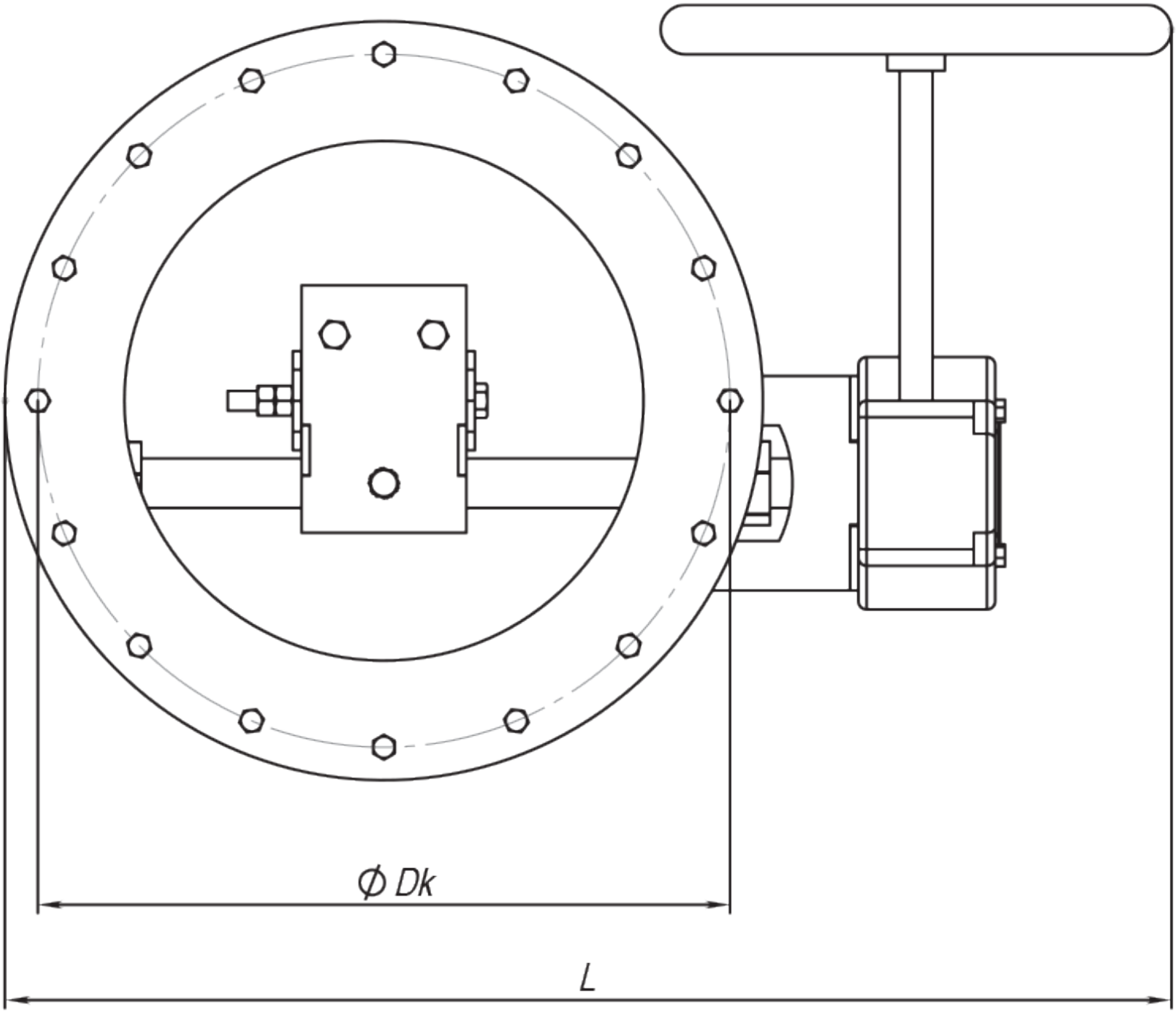
Ø Dk
L