GK-355

Airtight ventilation valve

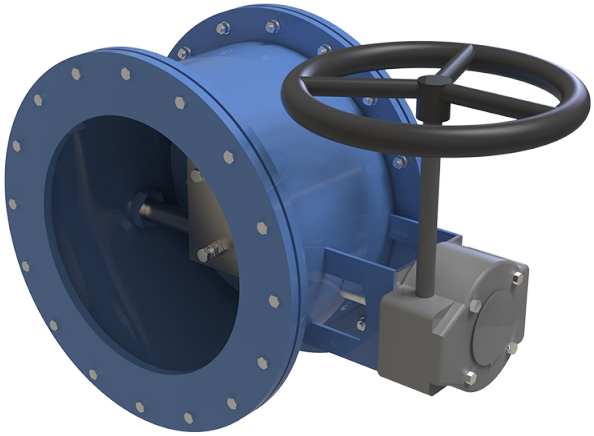

	Unit of measurement	GK-355
Connected air duct size	mm	355
Weight	kg	67

Dimensions

Dy	H	H1	B	L	Dk
355	490	485	276	748	450

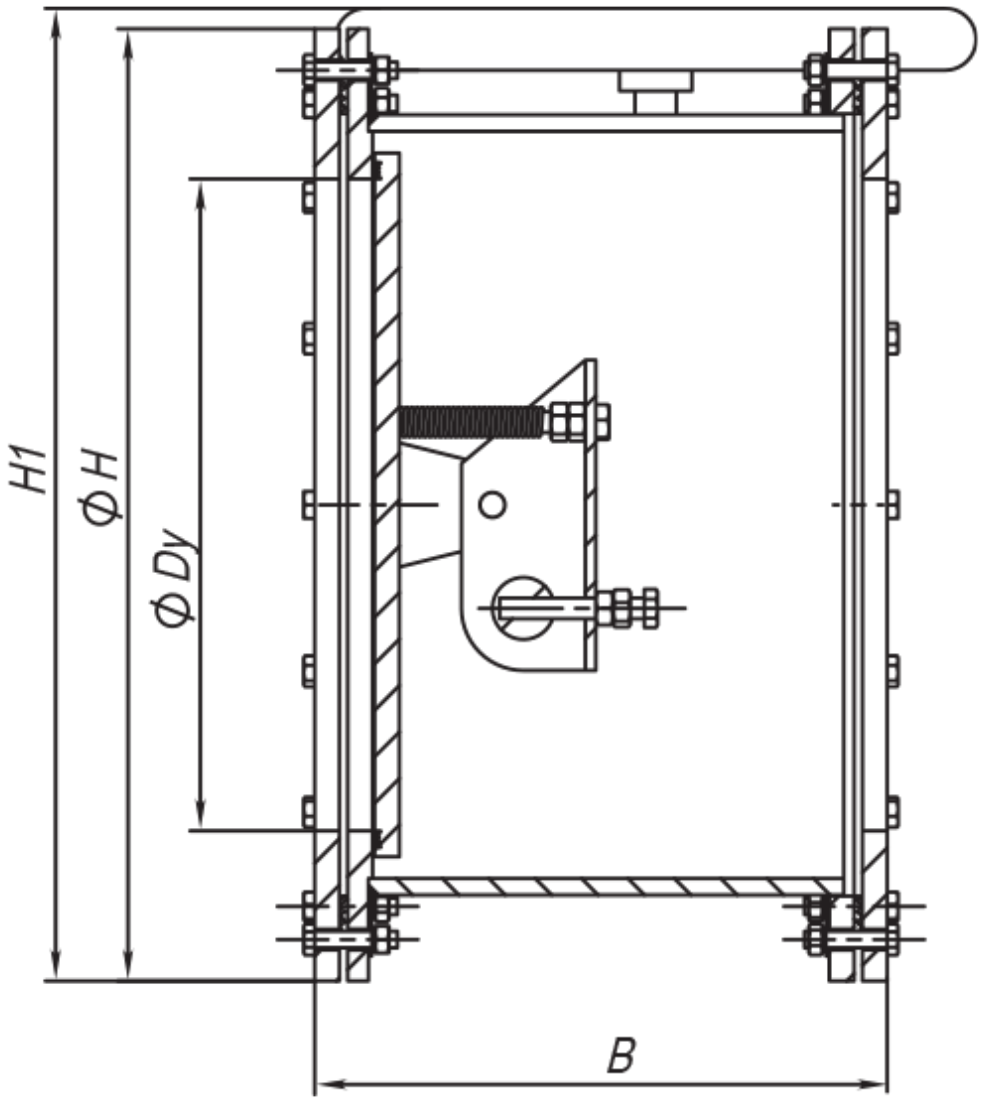
H1
ϕ H
ϕ Dy
B

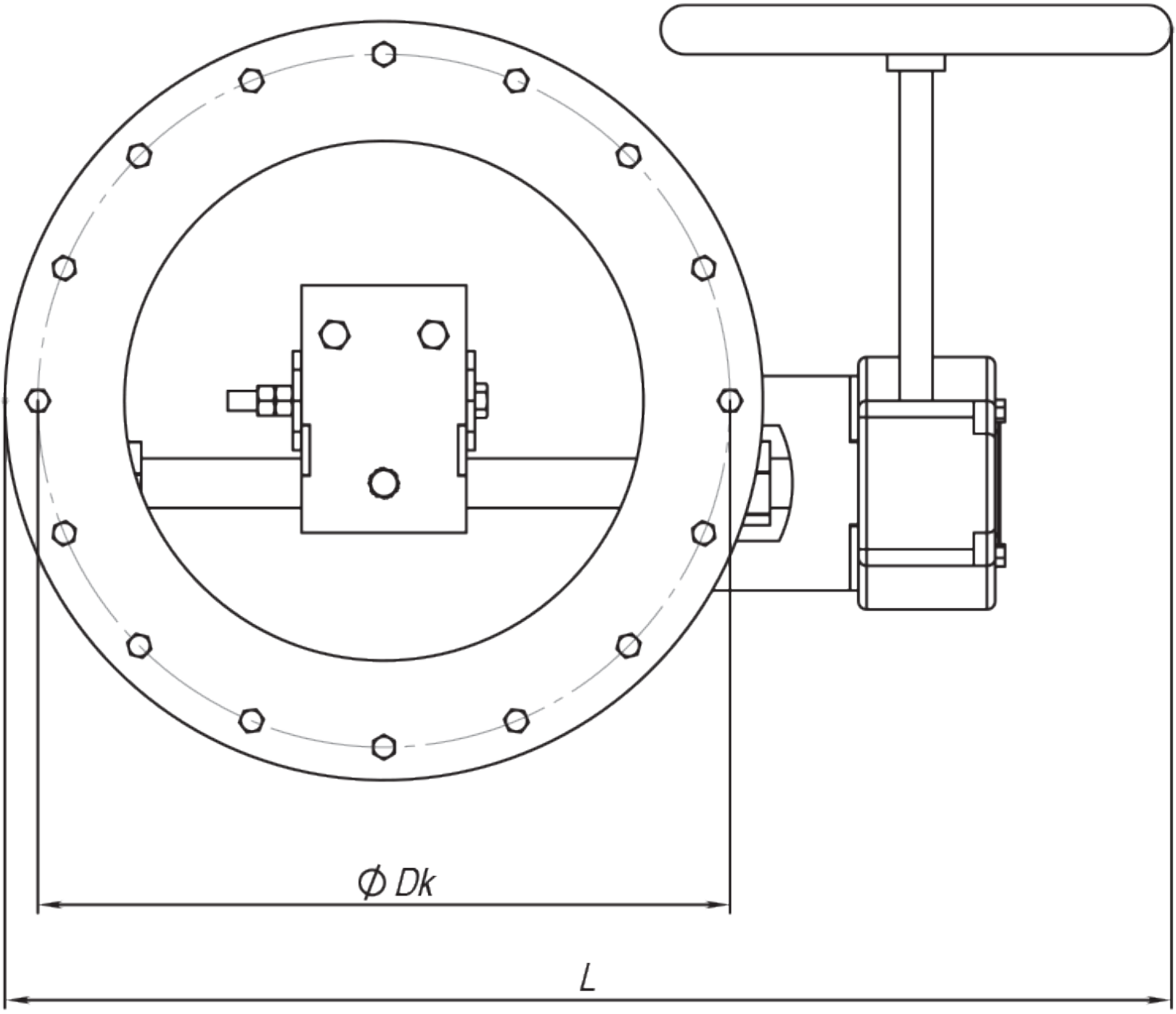
Ø Dk
L

