GK-400

Airtight ventilation valve

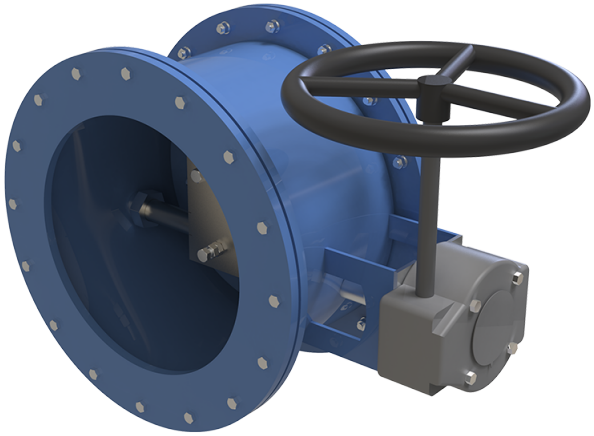

	Unit of measurement	GK-400
Connected air duct size	mm	400
Weight	kg	74

Dimensions

Dy	H	H1	B	L	Dk
400	530	505	296	790	500

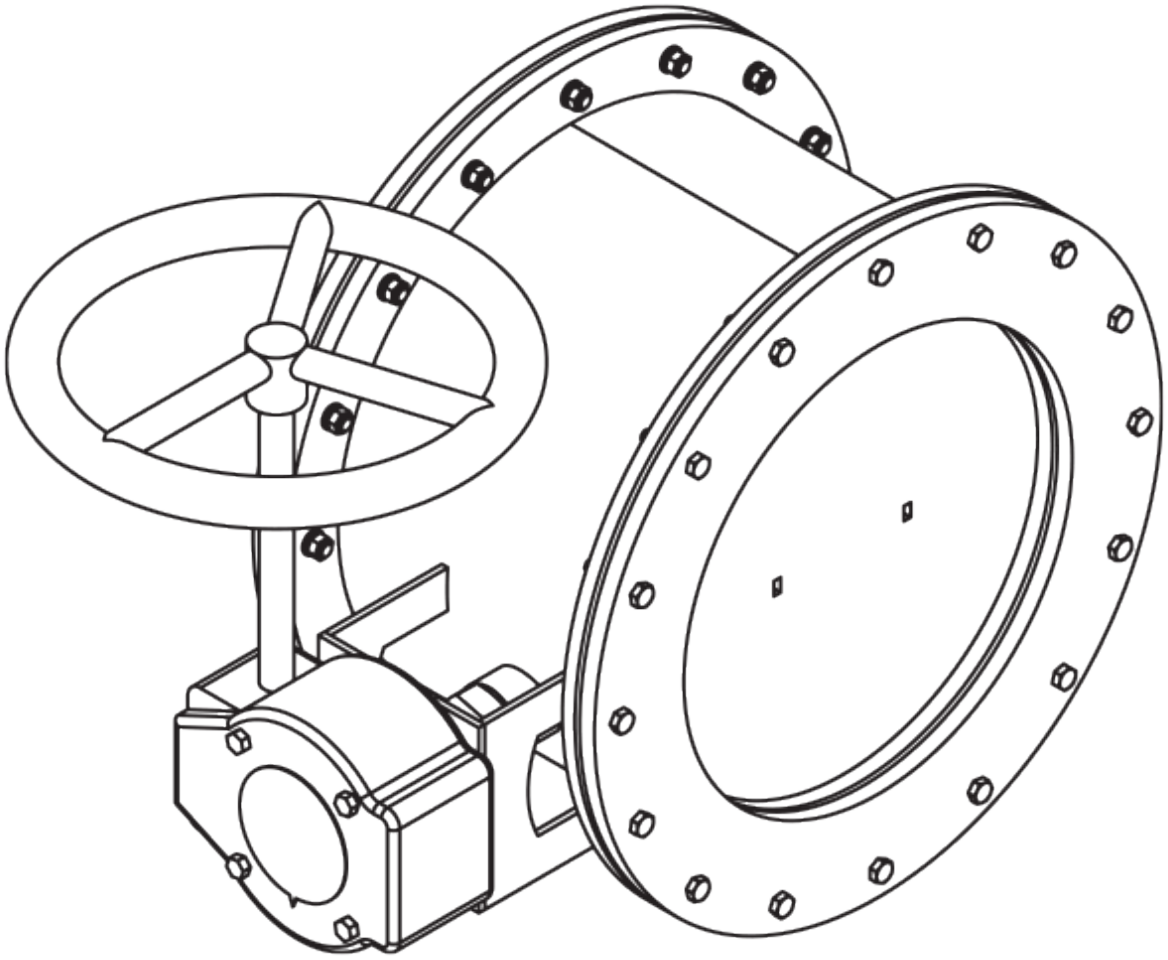

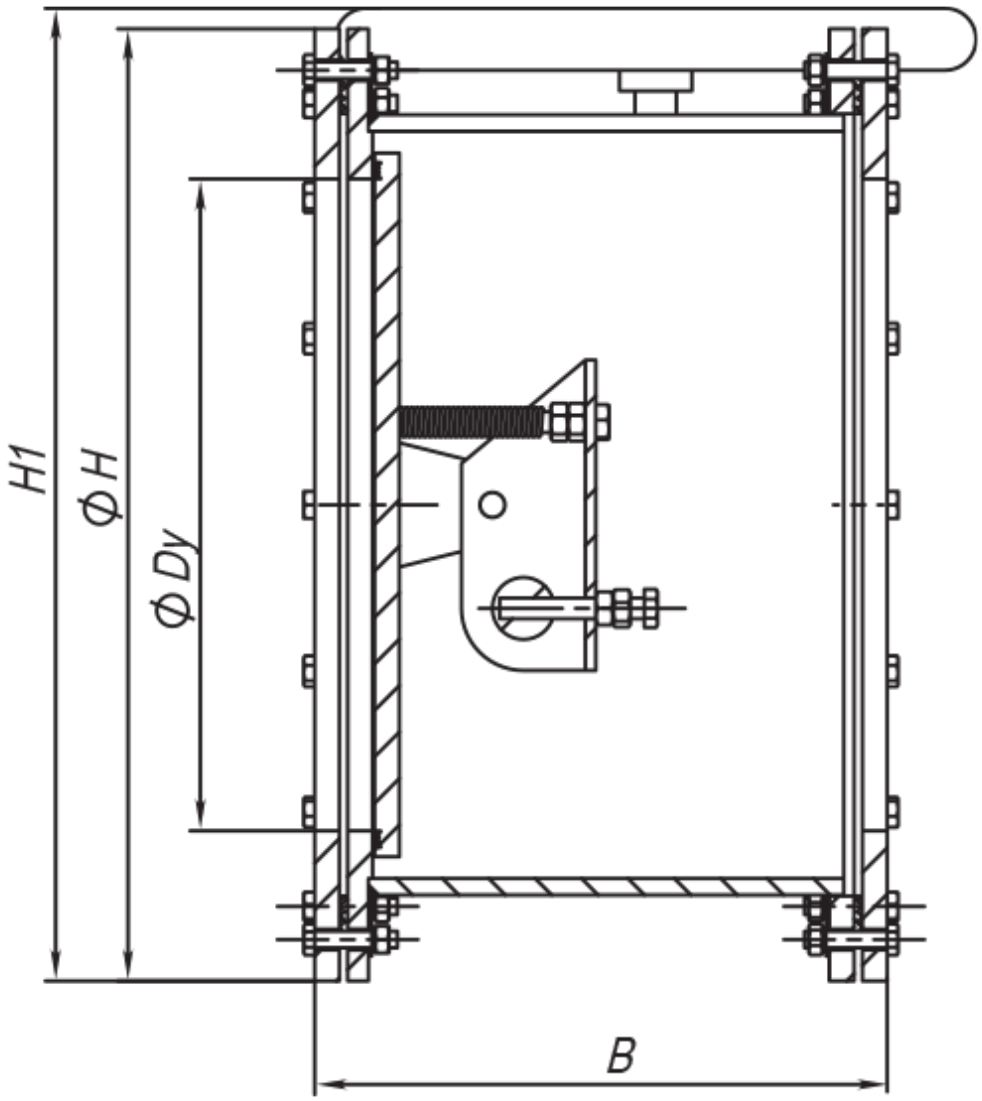
H1
ϕ H
ϕ Dy
B

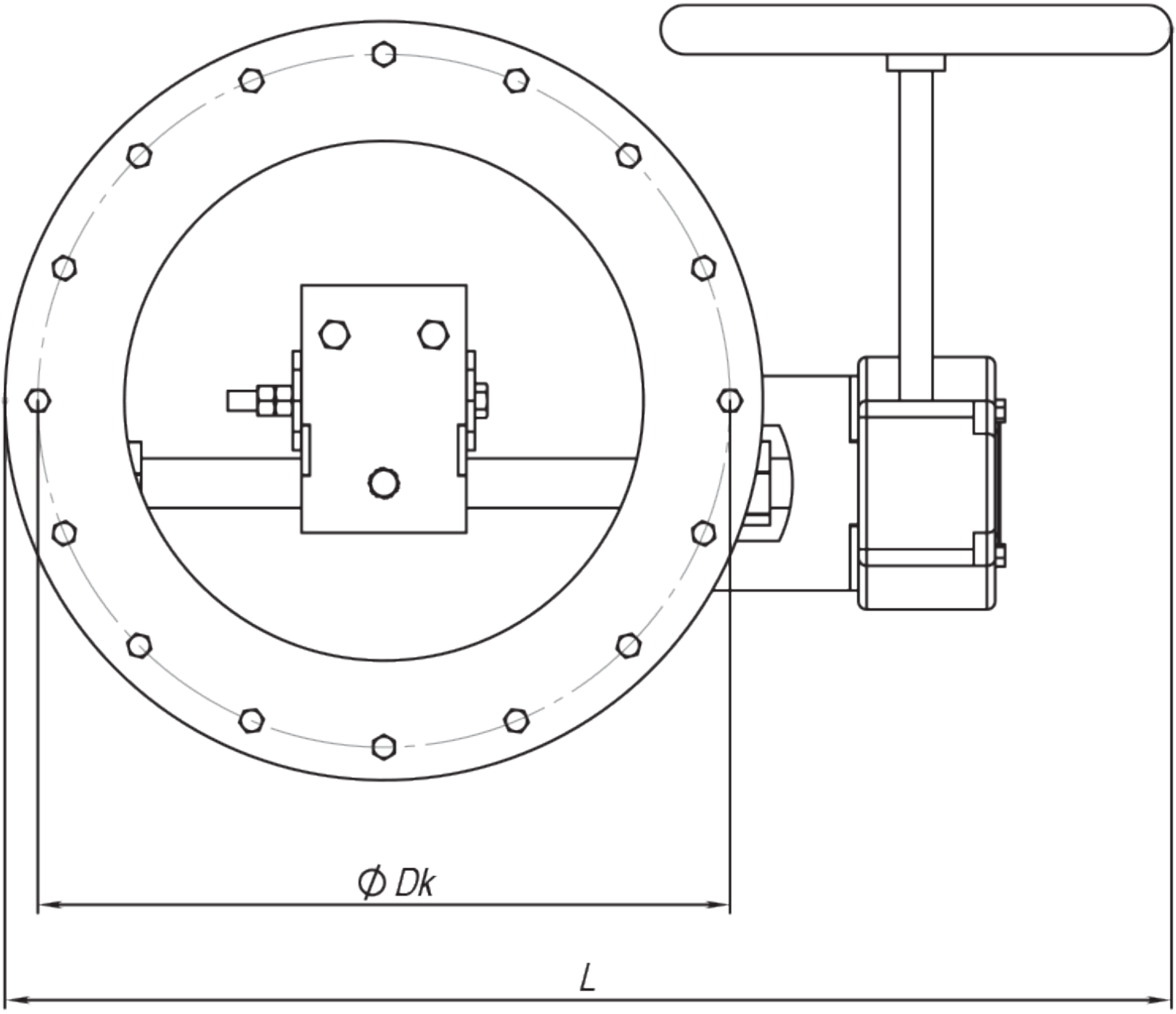
Ø Dk
L