GK-450

Airtight ventilation valve

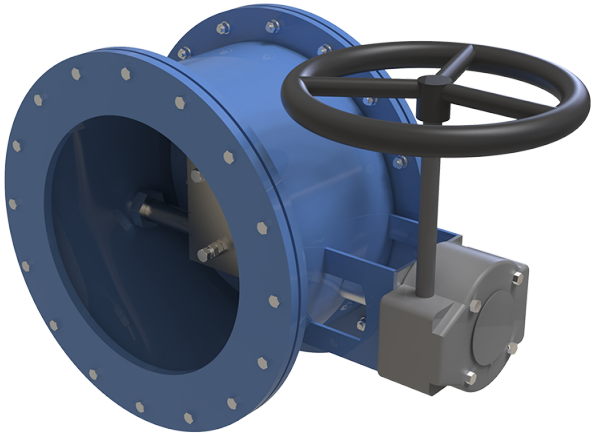

	Unit of measurement	GK-450
Connected air duct size	mm	450
Weight	kg	89

Dimensions

Dy	H	H1	B	L	Dk
450	600	540	296	865	550

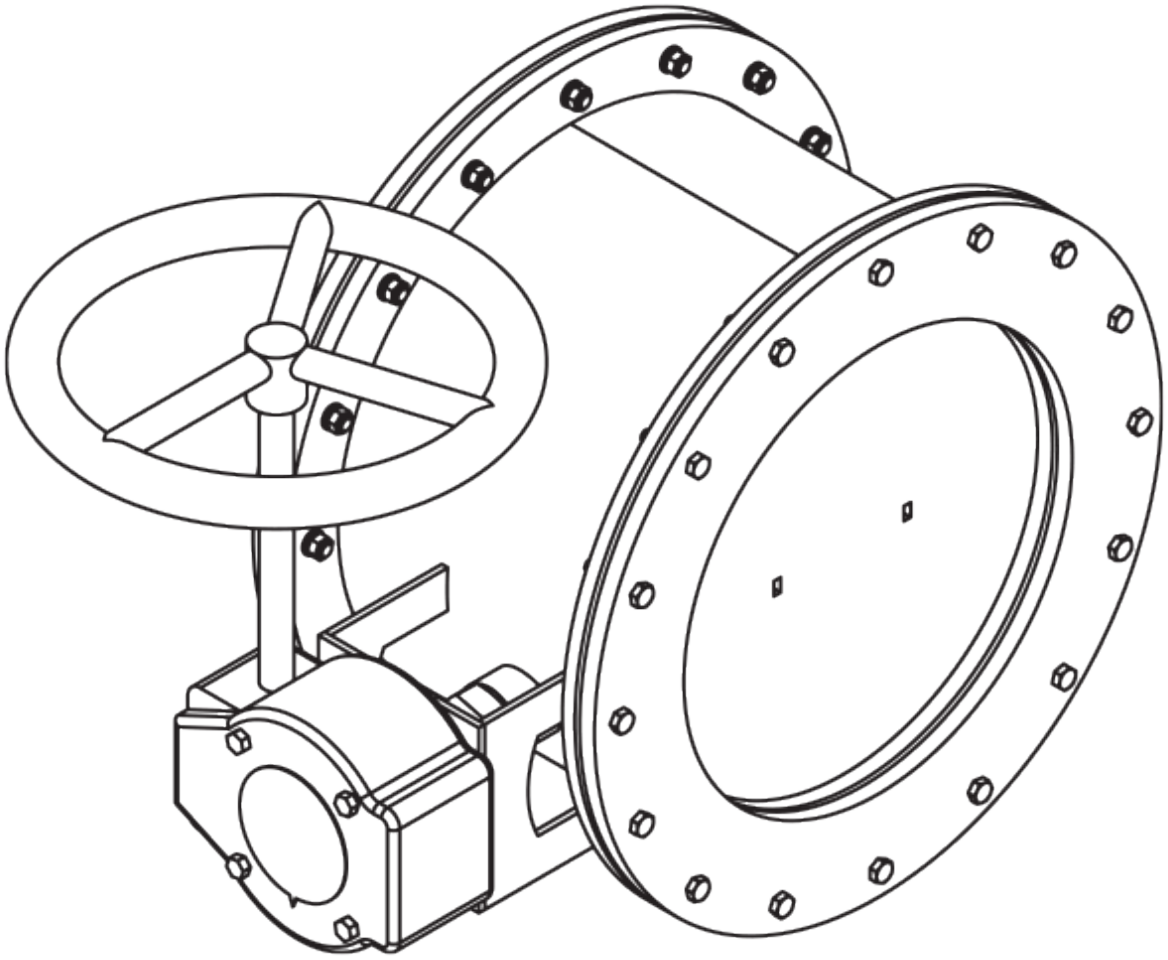

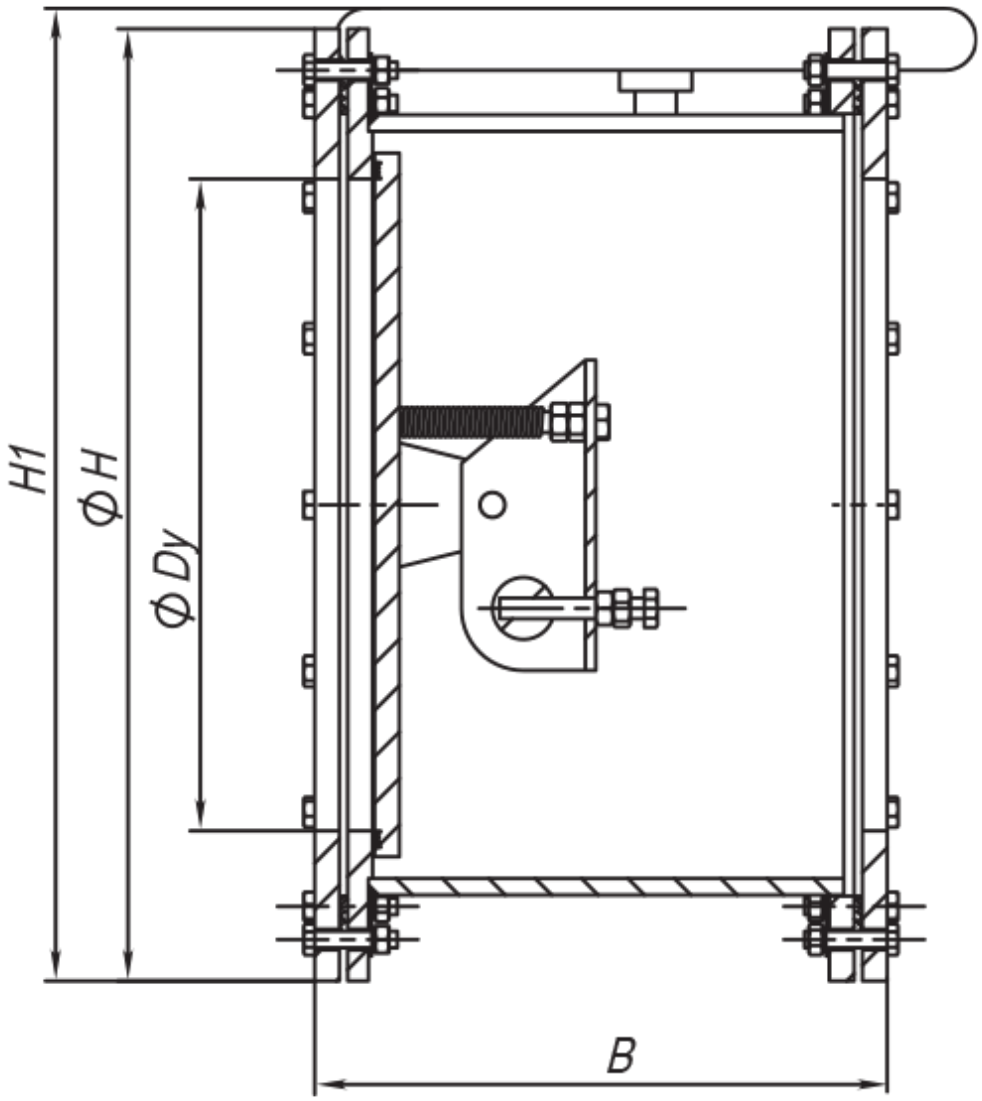
H1
ϕ H
ϕ Dy
B

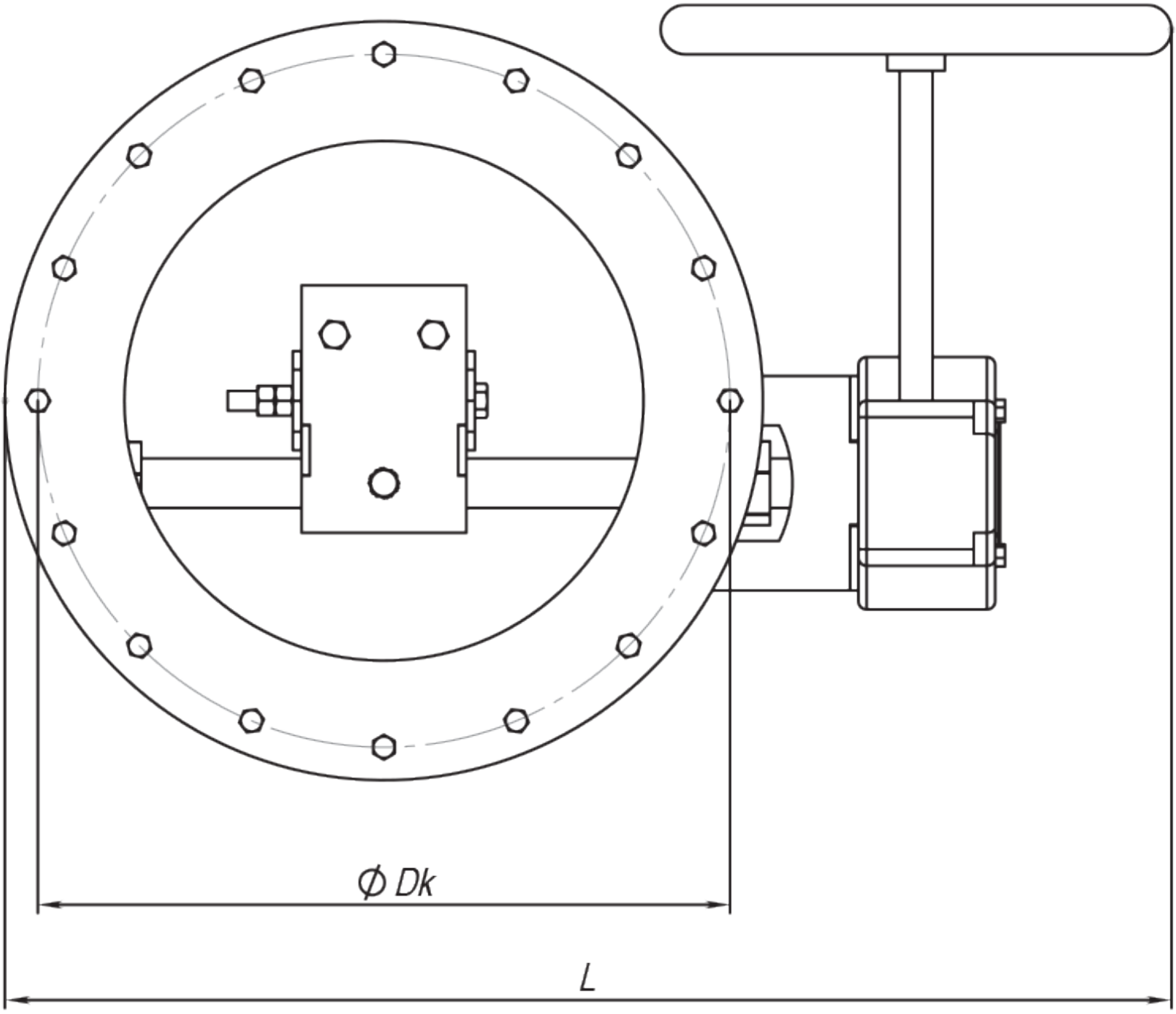
Ø Dk
L