GK-500

Airtight ventilation valve

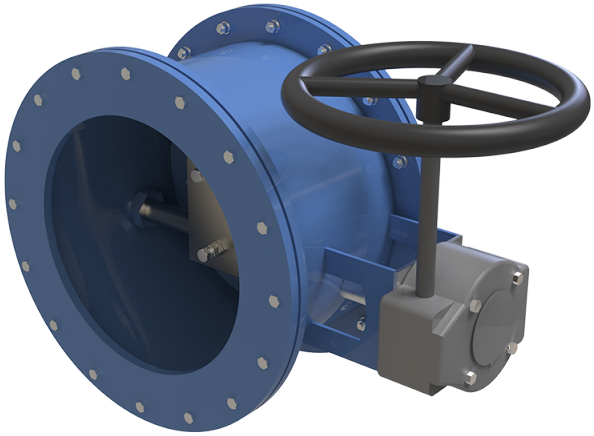

	Unit of measurement	GK-500
Connected air duct size	mm	500
Weight	kg	103

Dimensions

Dy	H	H1	B	L	Dk
500	670	575	296	910	620

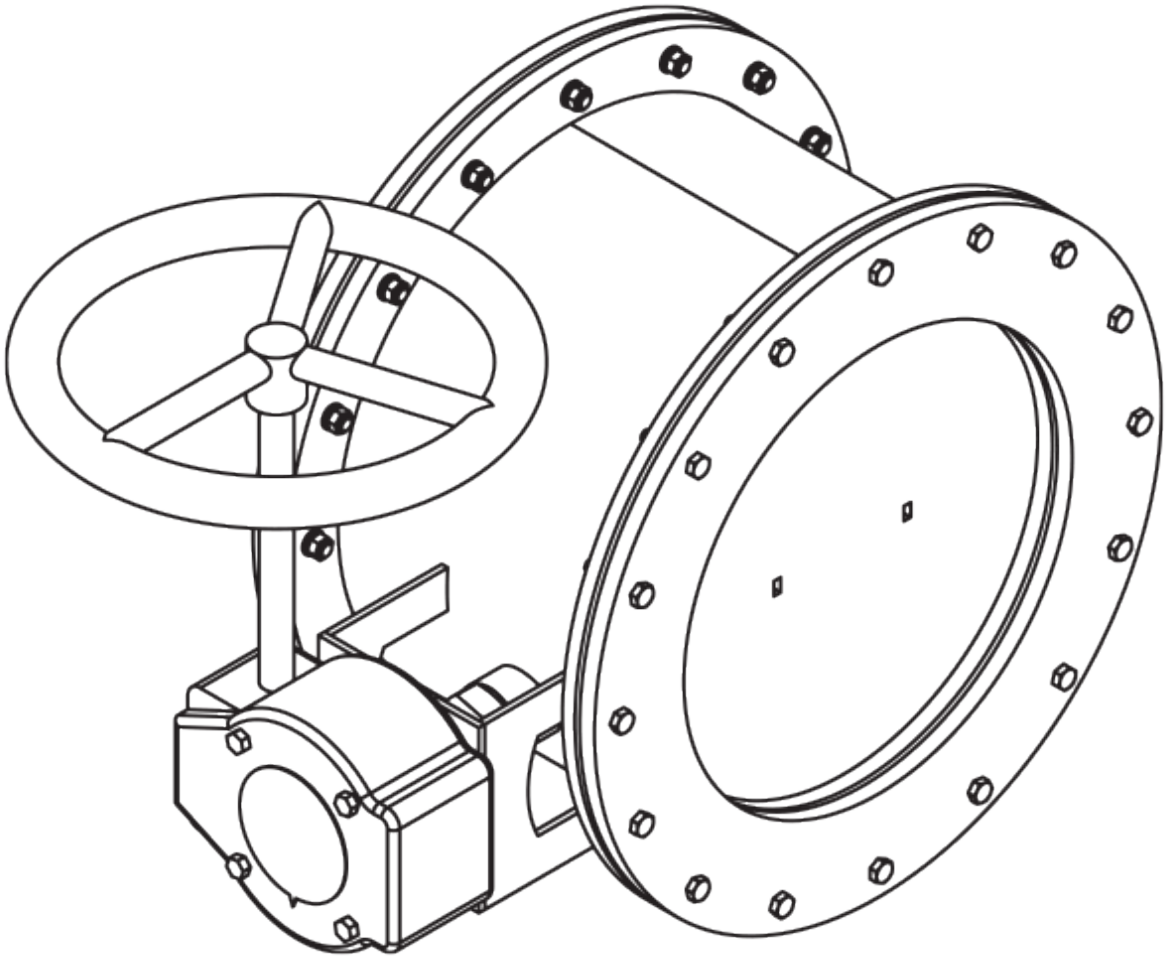

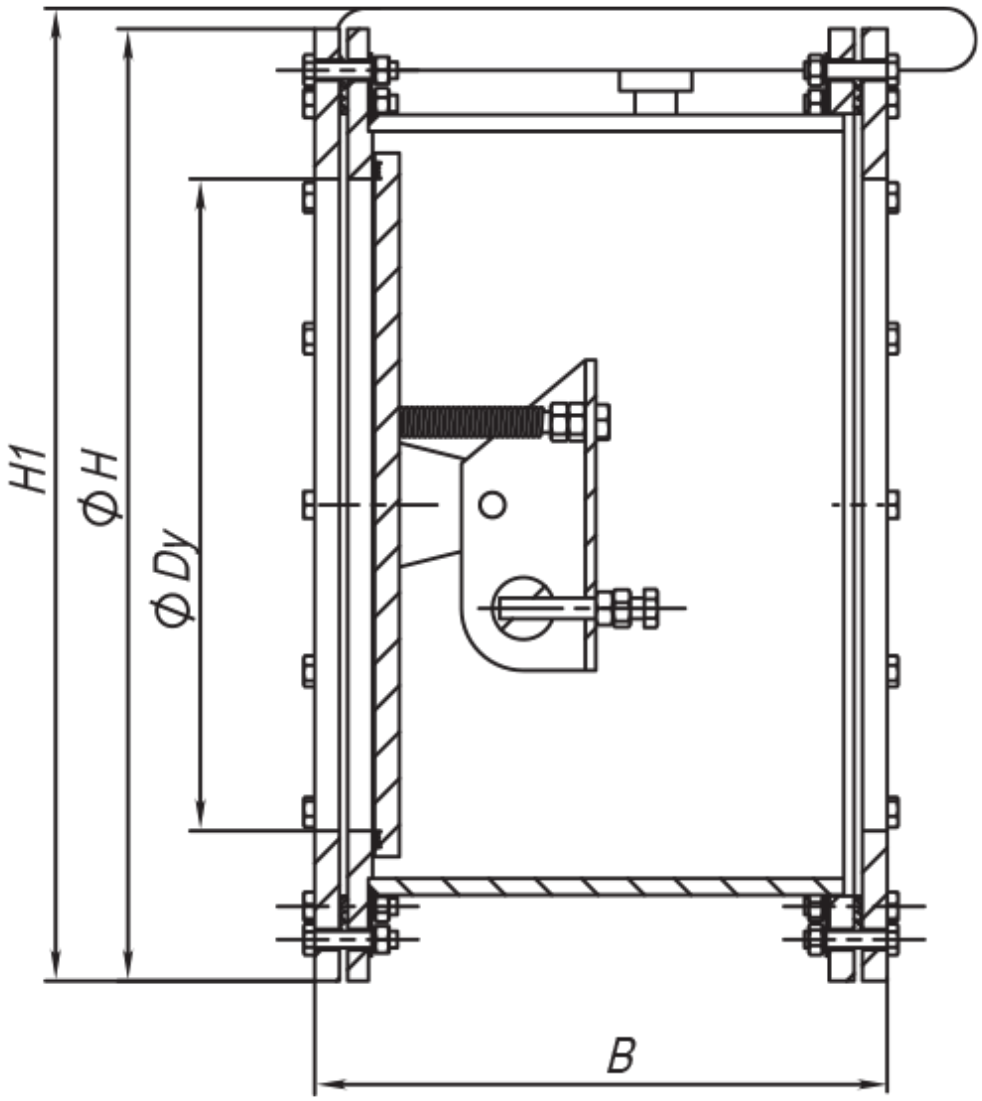
H1
ϕ H
ϕ Dy
B

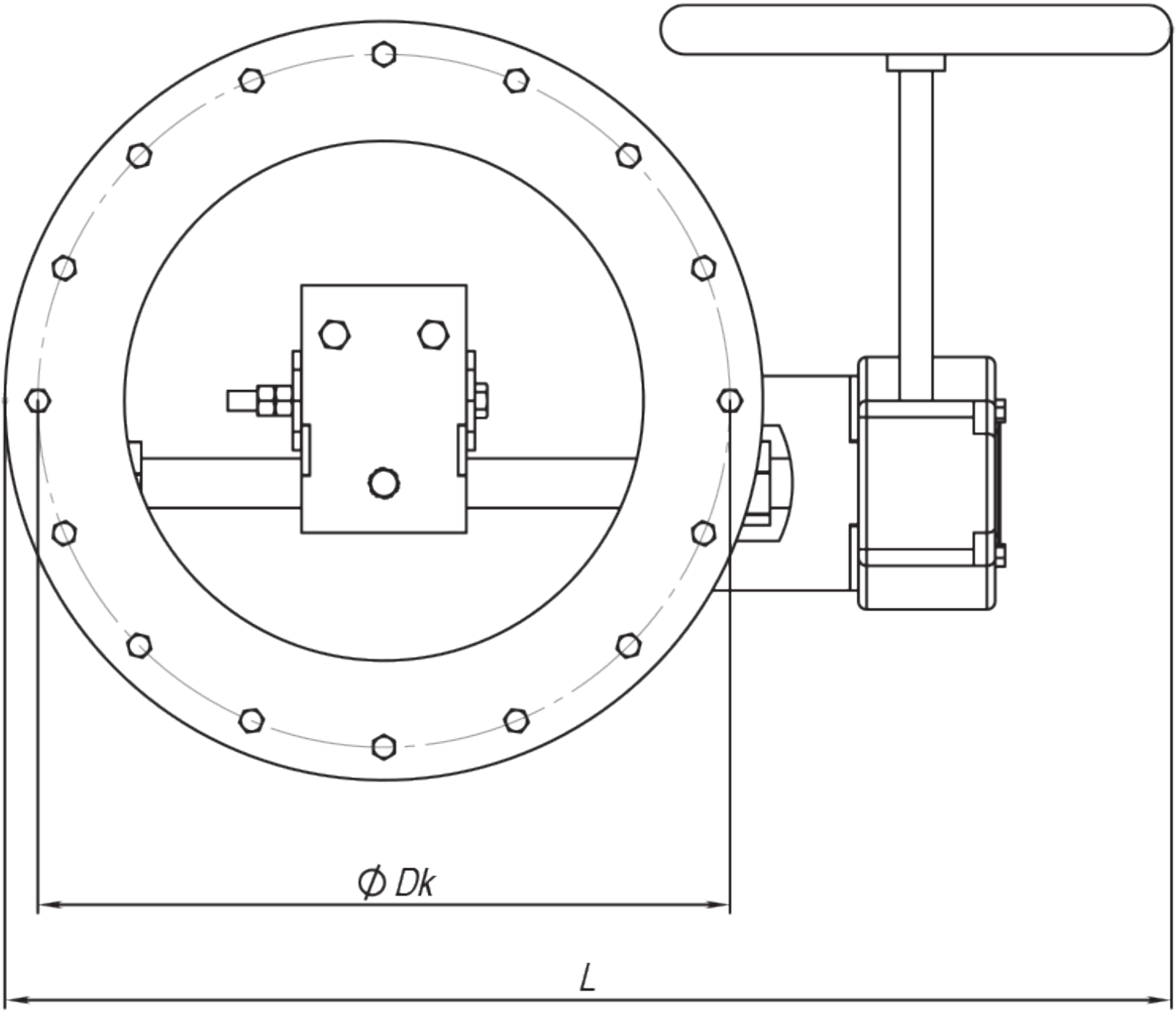
Ø Dk
L