GK-560

Airtight ventilation valve

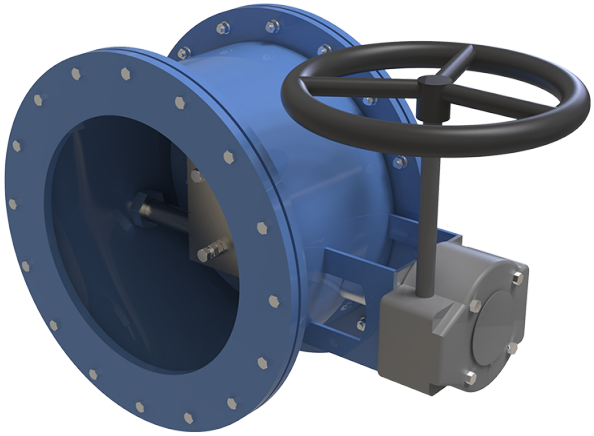

	Unit of measurement	GK-560
Connected air duct size	mm	560
Weight	kg	115

Dimensions

Dy	H	H1	B	L	Dk
560	730	605	296	930	670

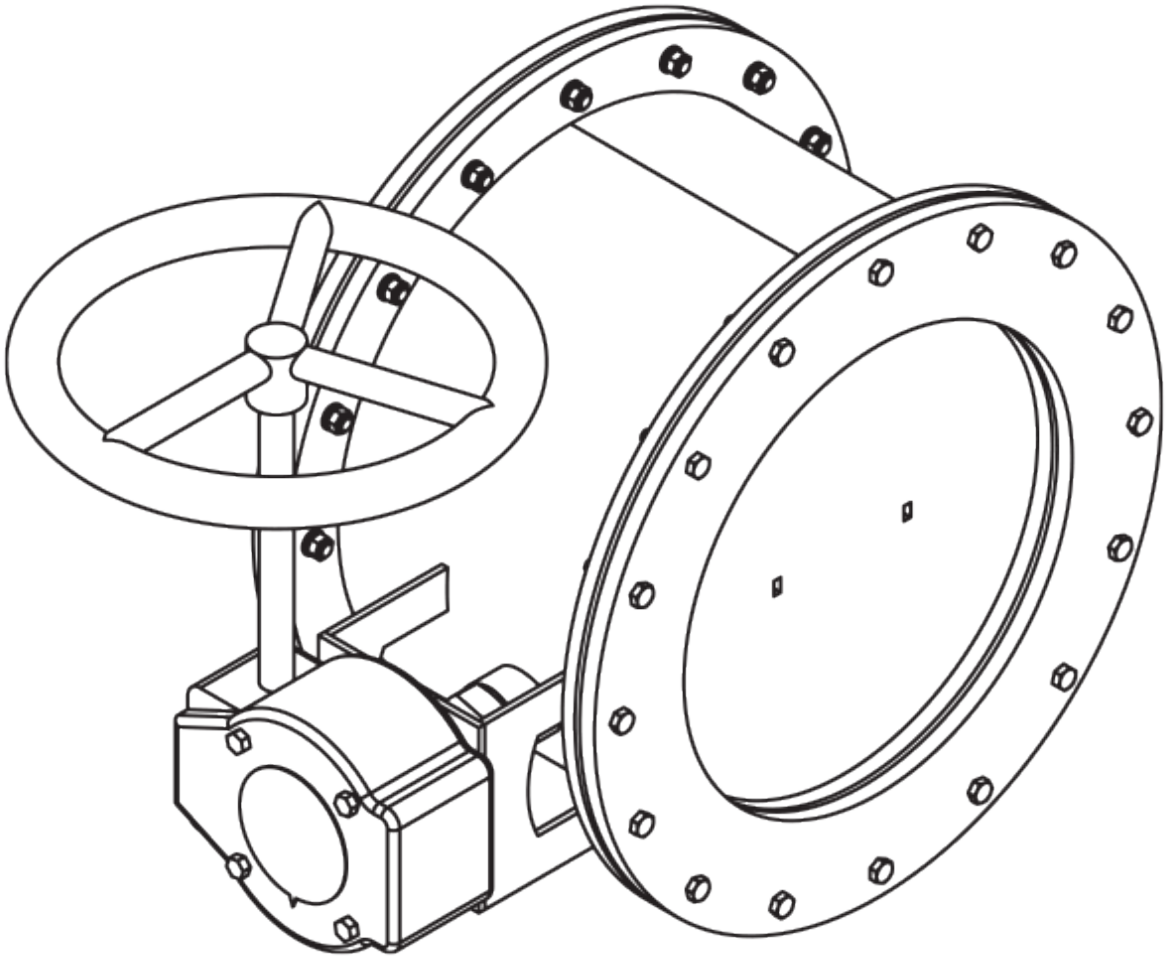

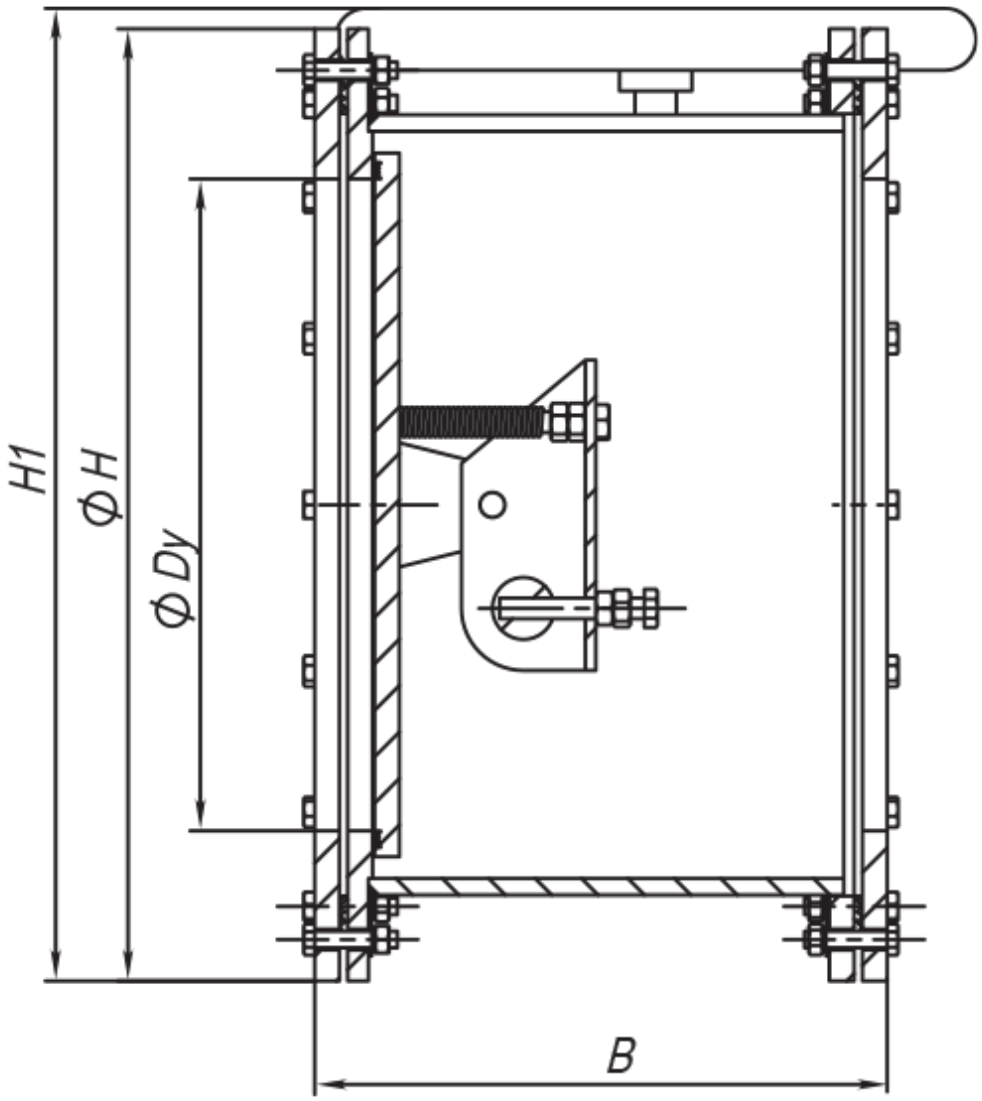
H1
ϕ H
ϕ Dy
B

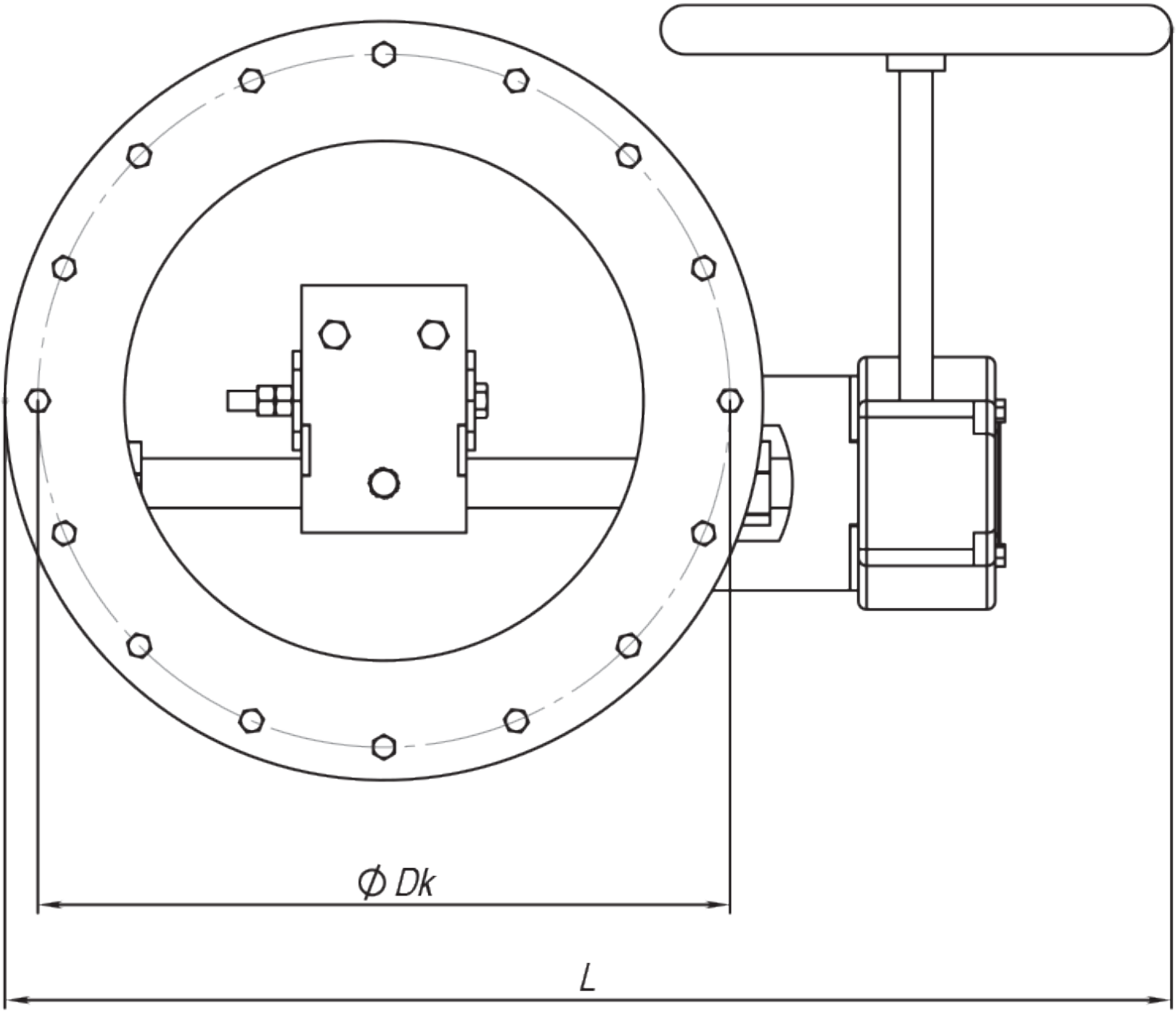
Ø Dk
L