GK-600

Airtight ventilation valve

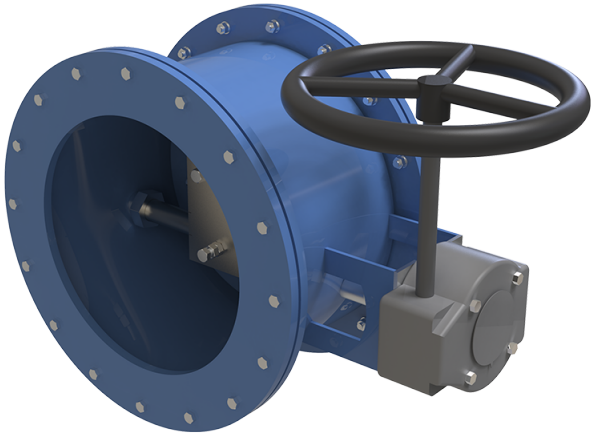

	Unit of measurement	GK-600
Connected air duct size	mm	600
Weight	kg	123

Dimensions

Dy	H	H1	B	L	Dk
600	770	625	296	970	720

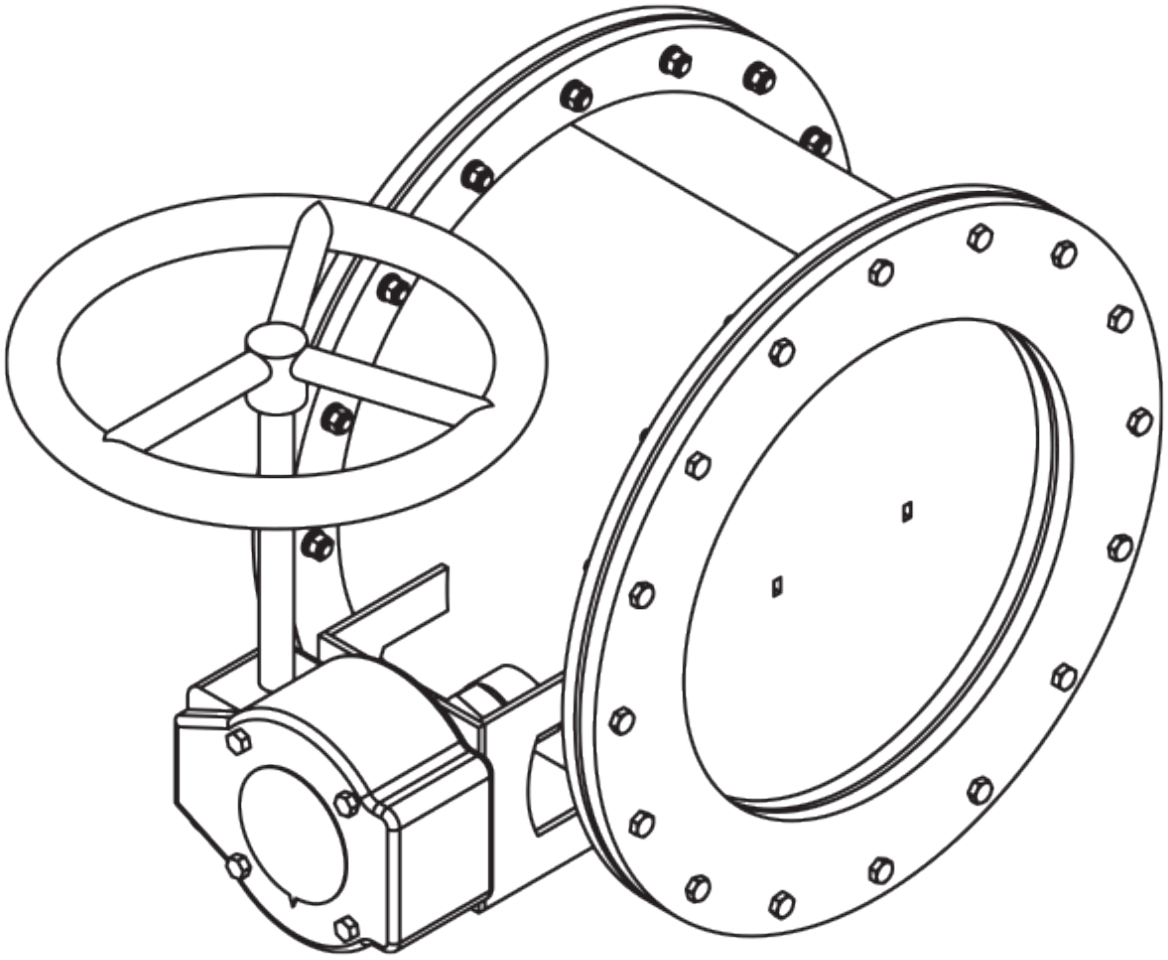

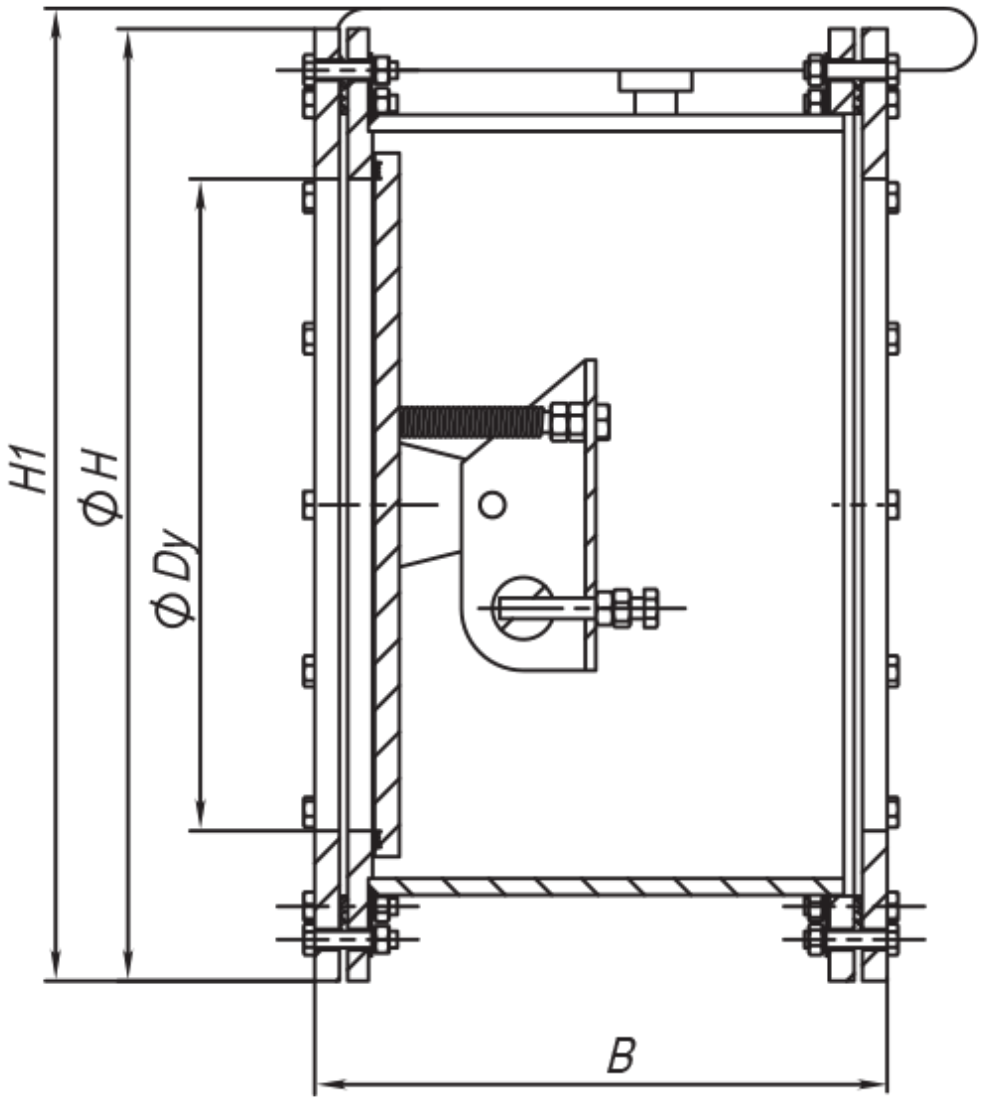
H1
ϕ H
ϕ Dy
B

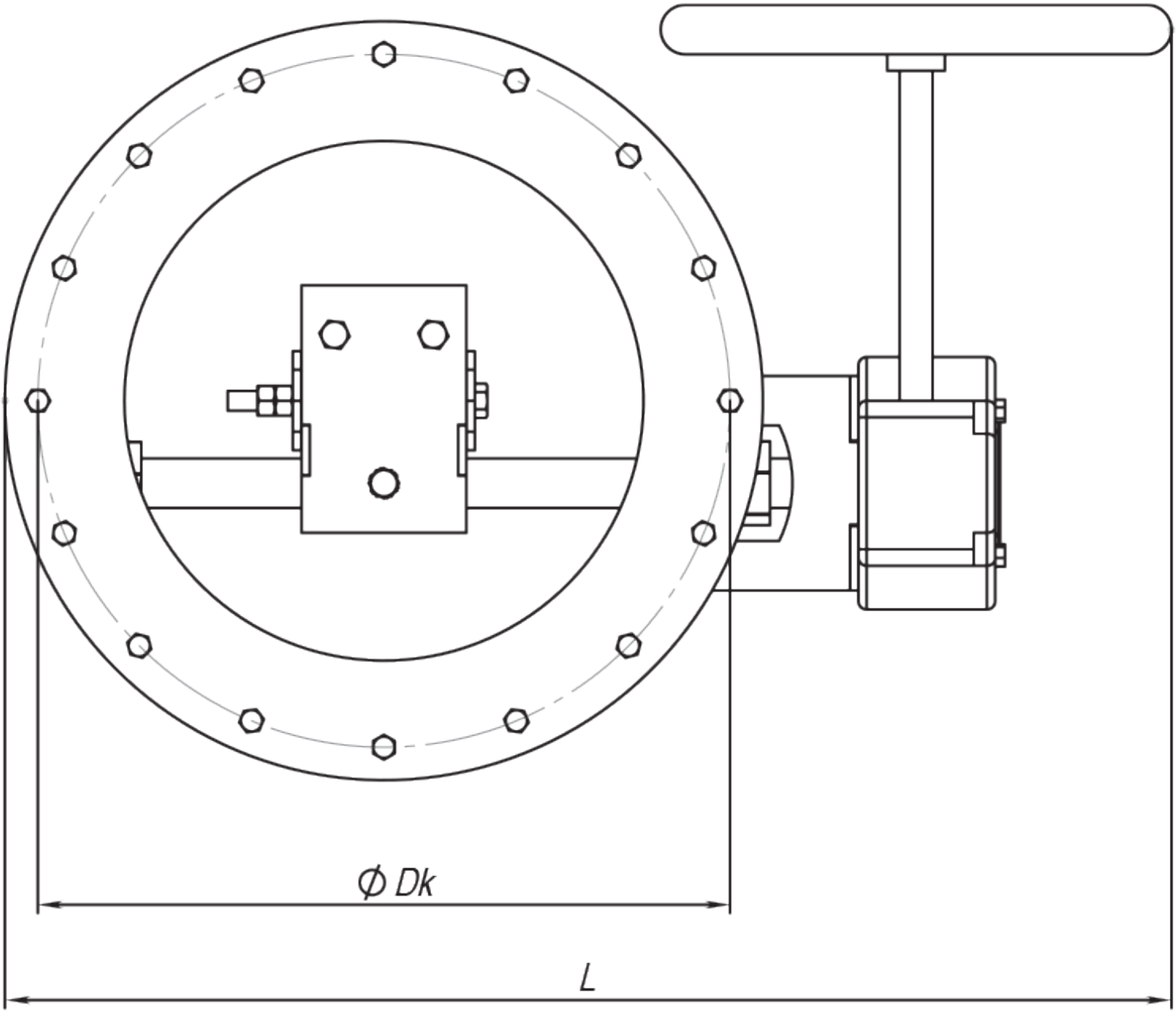
Ø Dk
L