GKE-100

Airtight ventilation valve with an electric actuator

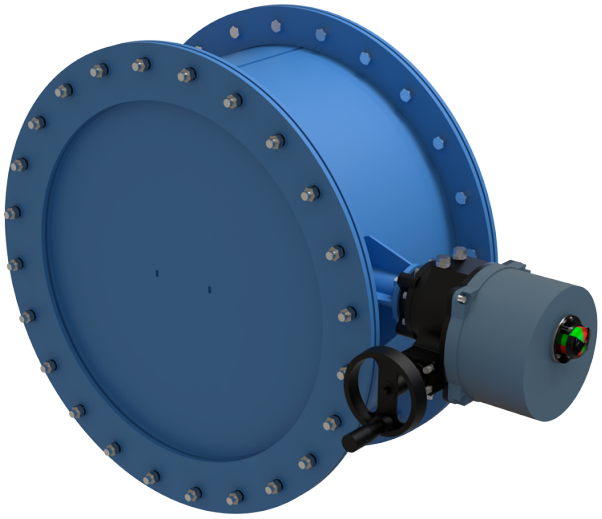

	Unit of measurement	GKE-100
Connected air duct size	mm	100
Weight	kg	18

Dimensions

Dn	D	D1	A	B	C
100	185	205	480	335	123

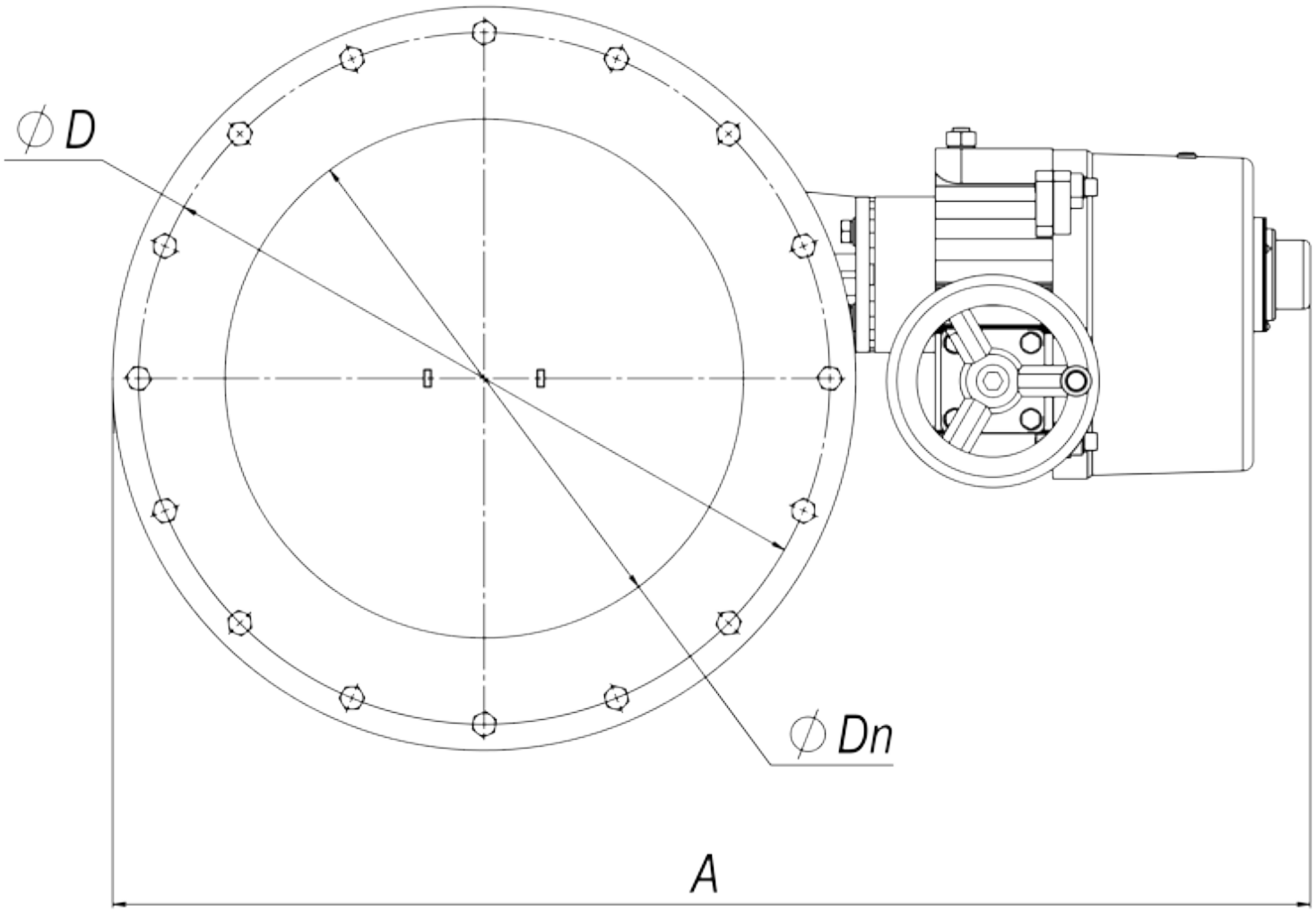
∅D
∅Dn
A

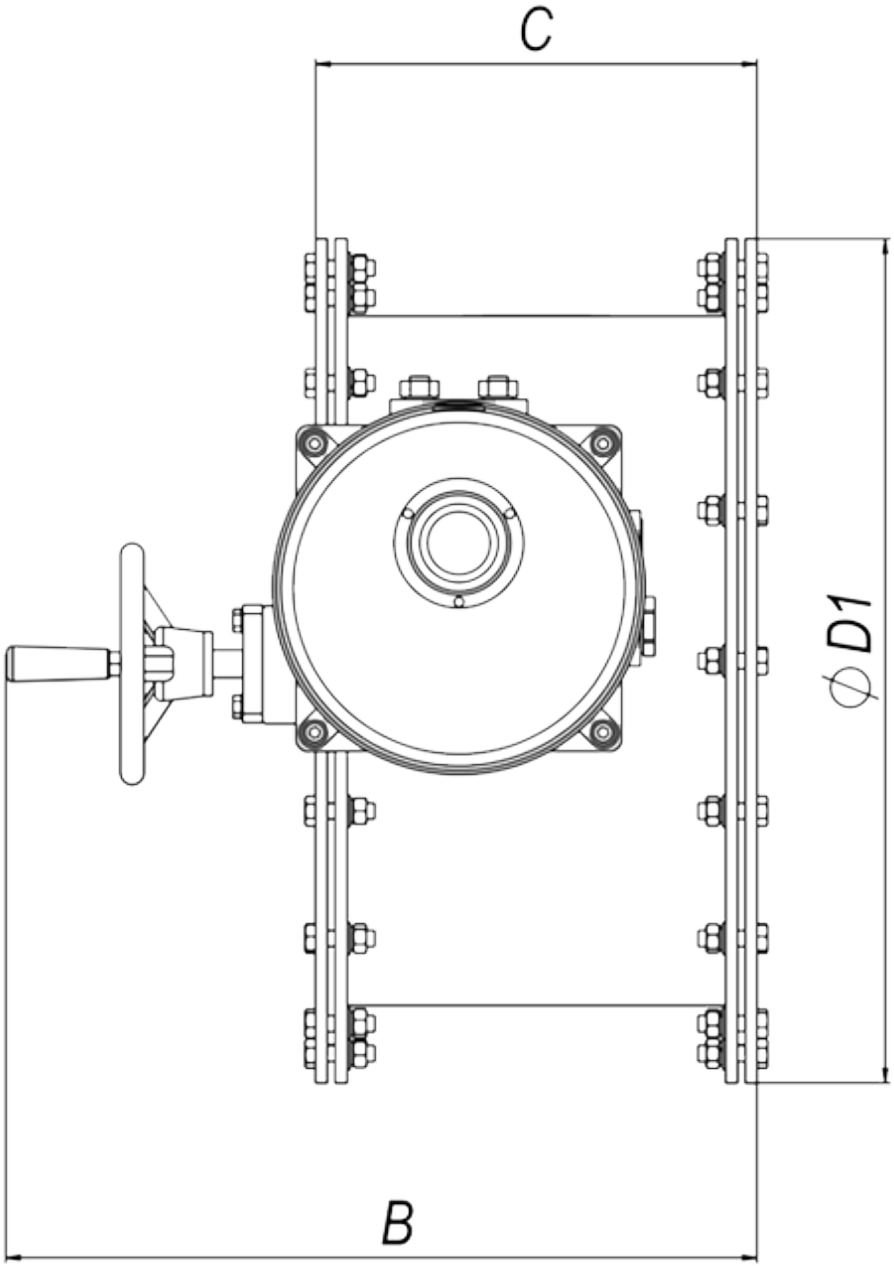
C
ϕ D1
B