GKE-150

Airtight ventilation valve with an electric actuator

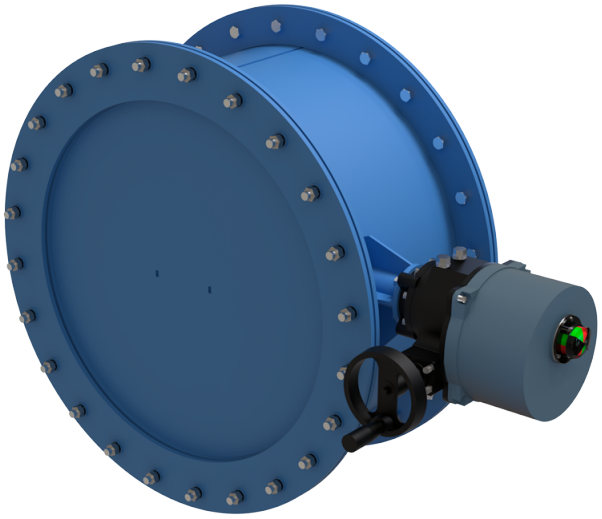

	Unit of measurement	GKE-150
Connected air duct size	mm	150
Weight	kg	21.5

Dimensions

Dn	D	D1	A	B	C
150	235	255	535	350	143

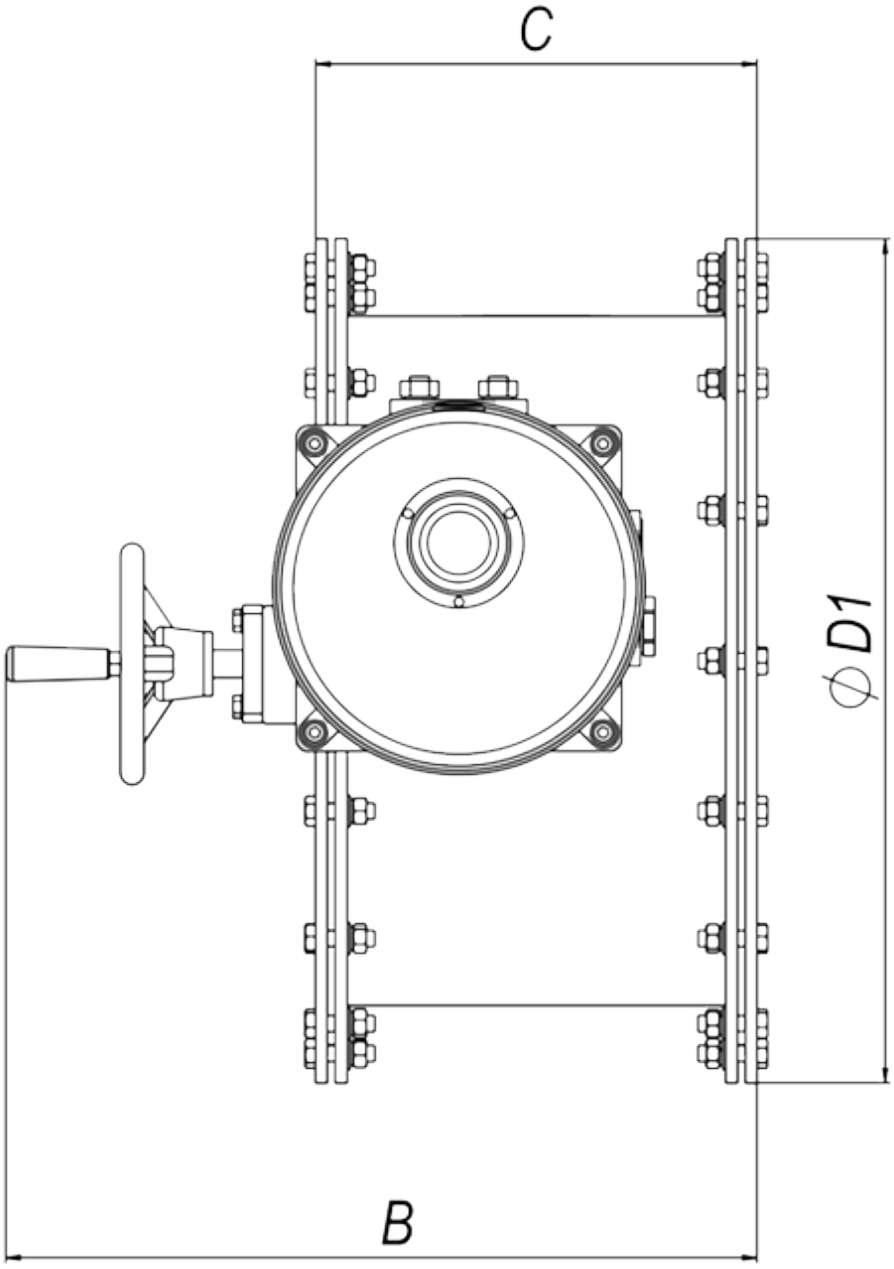
C
ϕ D1
B

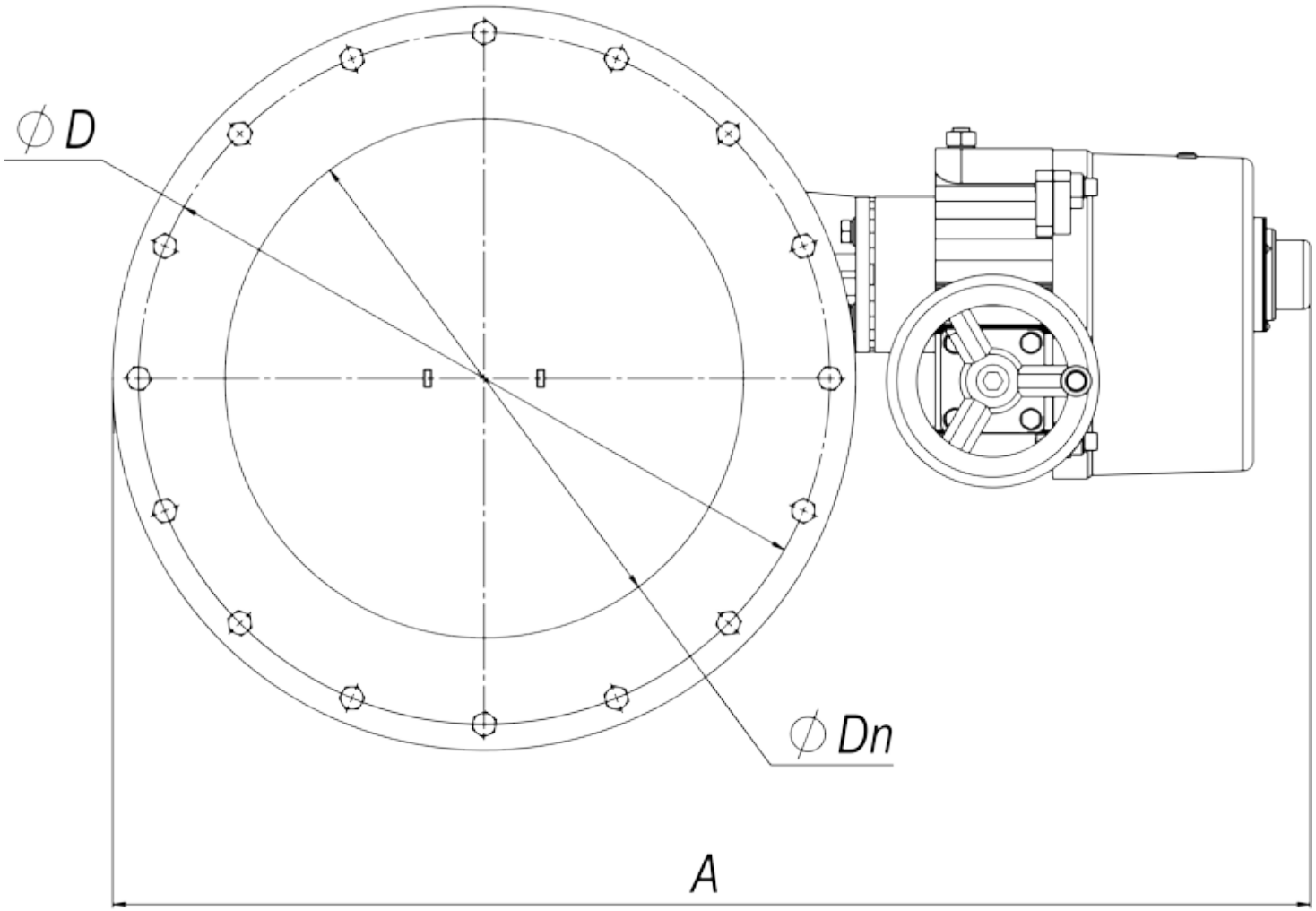
∅D
∅Dn
A