GKE-200

Airtight ventilation valve with an electric actuator

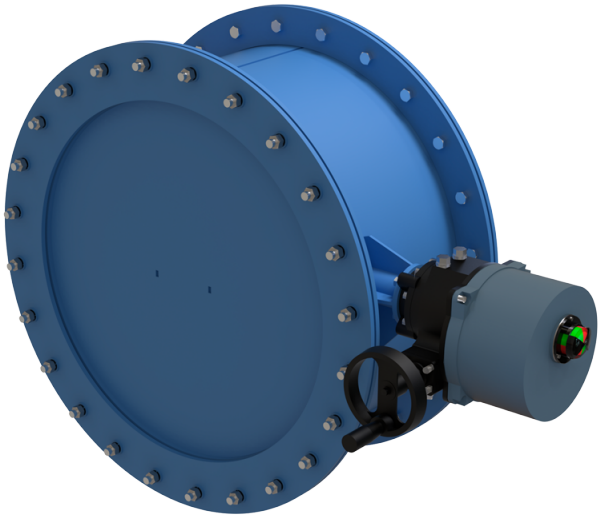

	Unit of measurement	GKE-200
Connected air duct size	mm	200
Weight	kg	28

Dimensions

Dn	D	D1	A	B	C
200	275	305	585	370	165

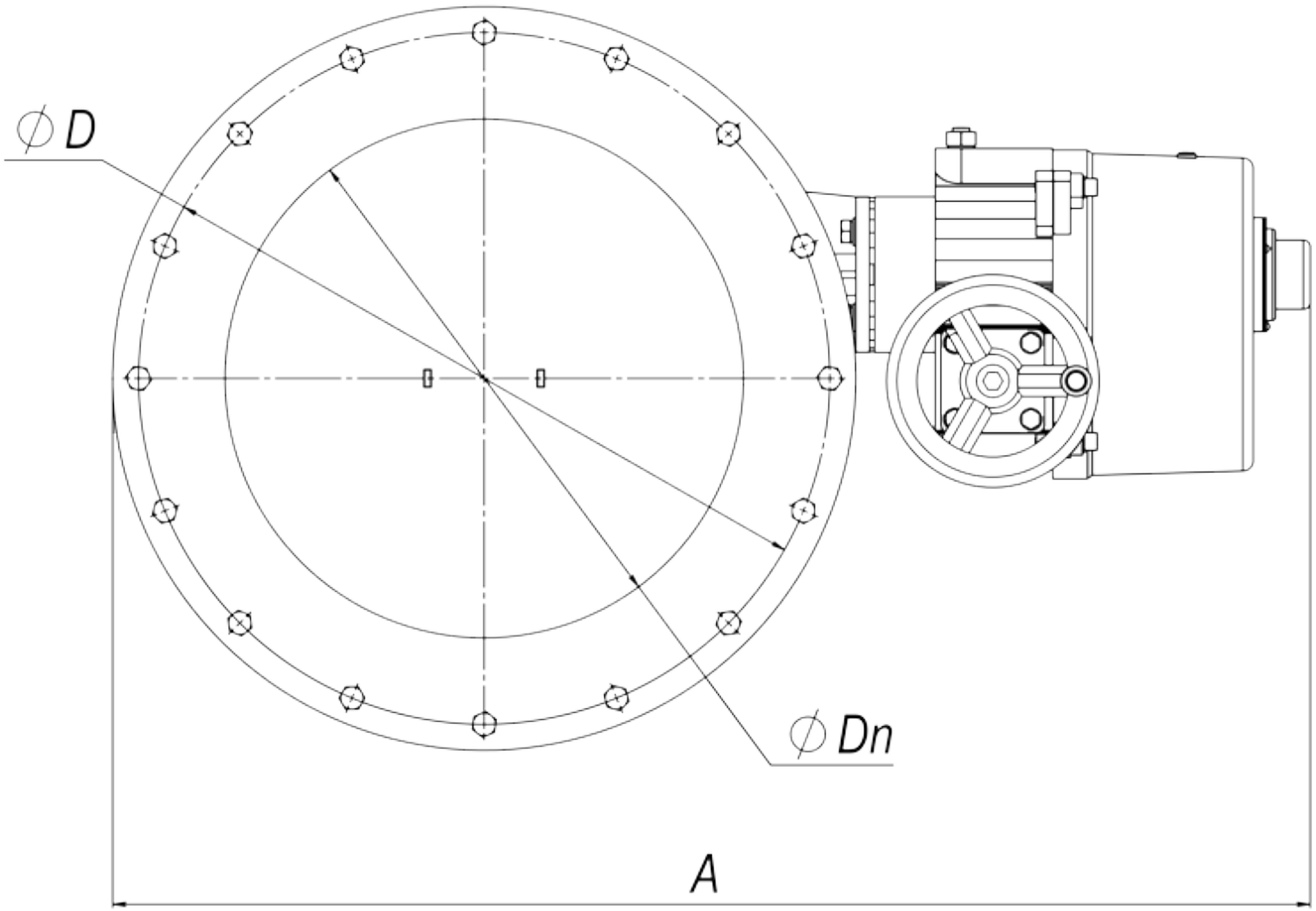
∅D
∅Dn
A

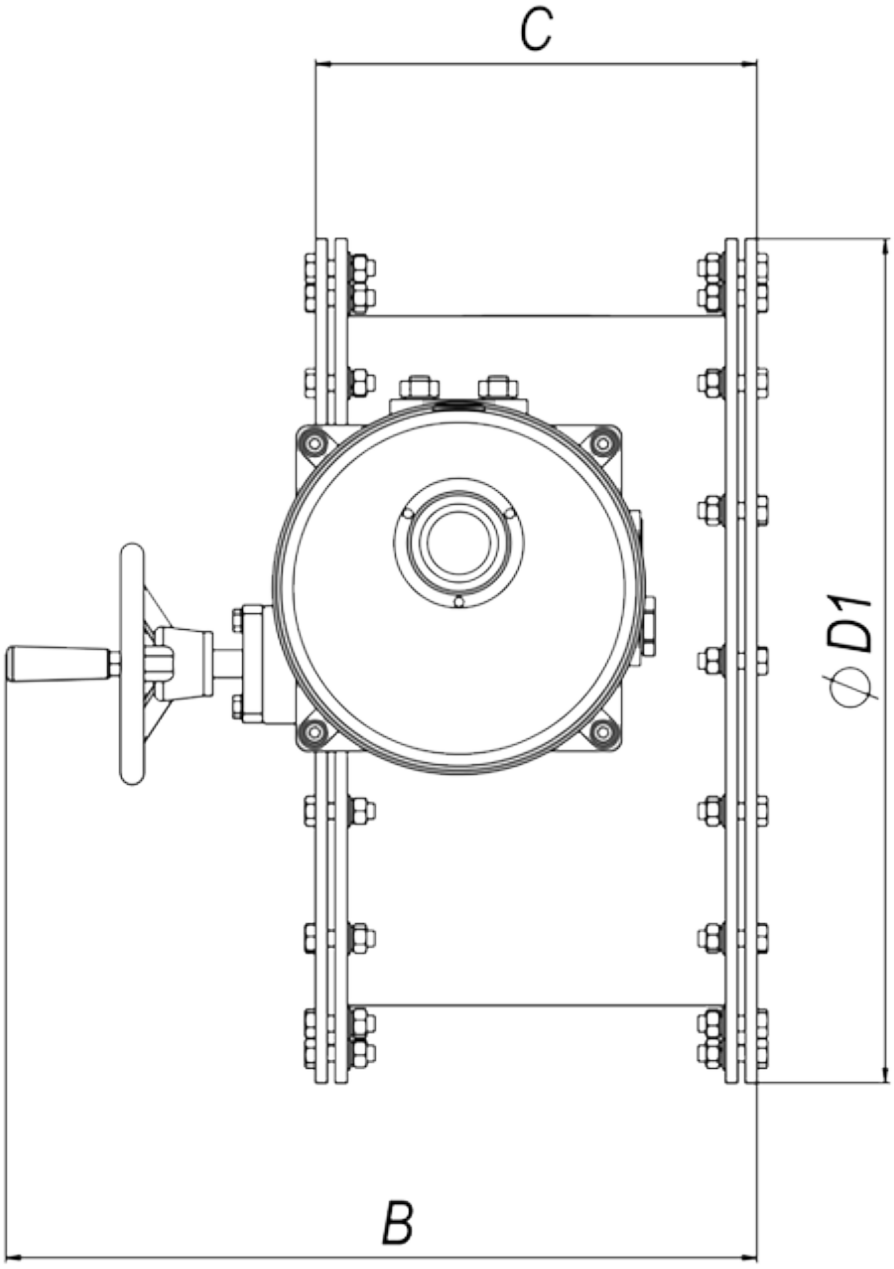
C
ϕ D1
B