GKE-225

Airtight ventilation valve with an electric actuator

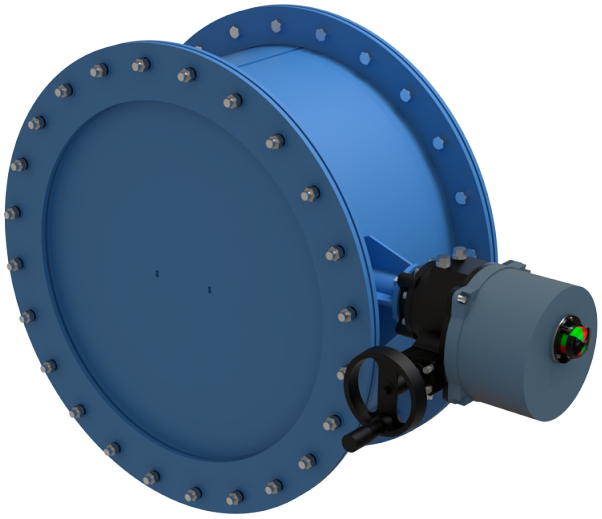

	Unit of measurement	GKE-225
Connected air duct size	mm	225
Weight	kg	30.5

Dimensions

Dn	D	D1	A	B	C
225	300	330	605	375	175

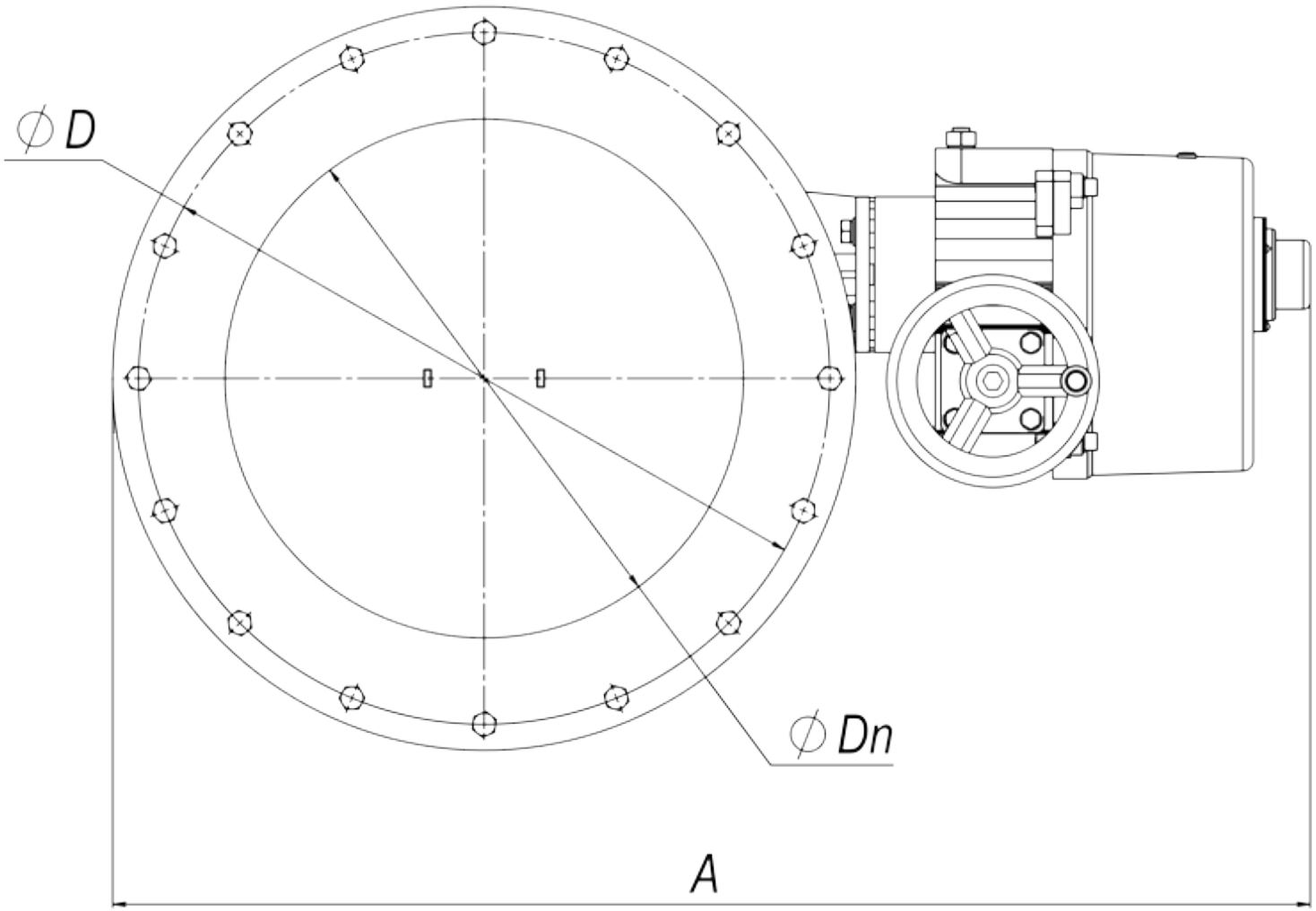
∅D
∅Dn
A

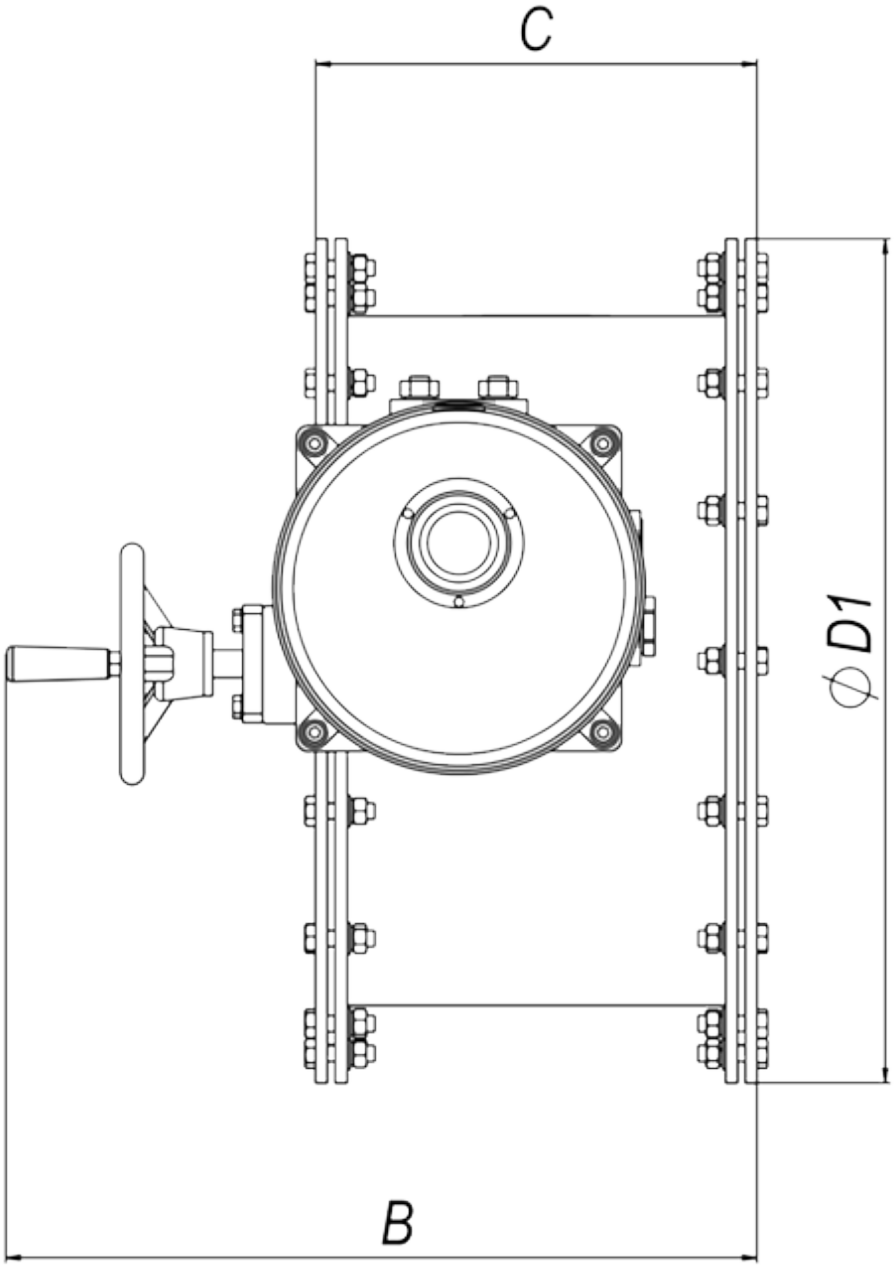
C
ϕ D1
B