GKE-250

Airtight ventilation valve with an electric actuator

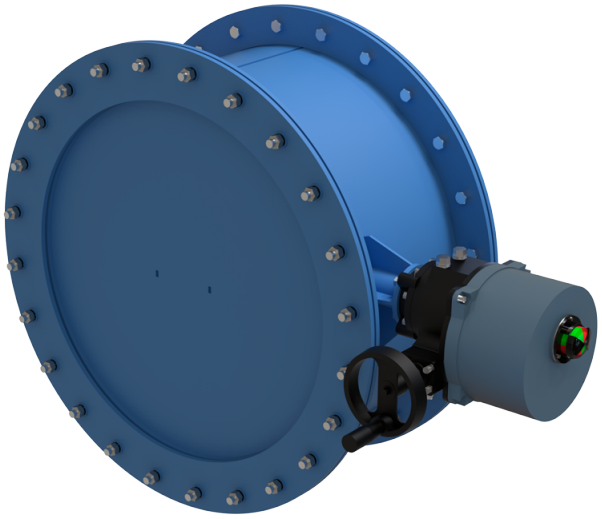

	Unit of measurement	GKE-250
Connected air duct size	mm	250
Weight	kg	35.5

Dimensions

Dn	D	D1	A	B	C
250	325	355	630	375	185

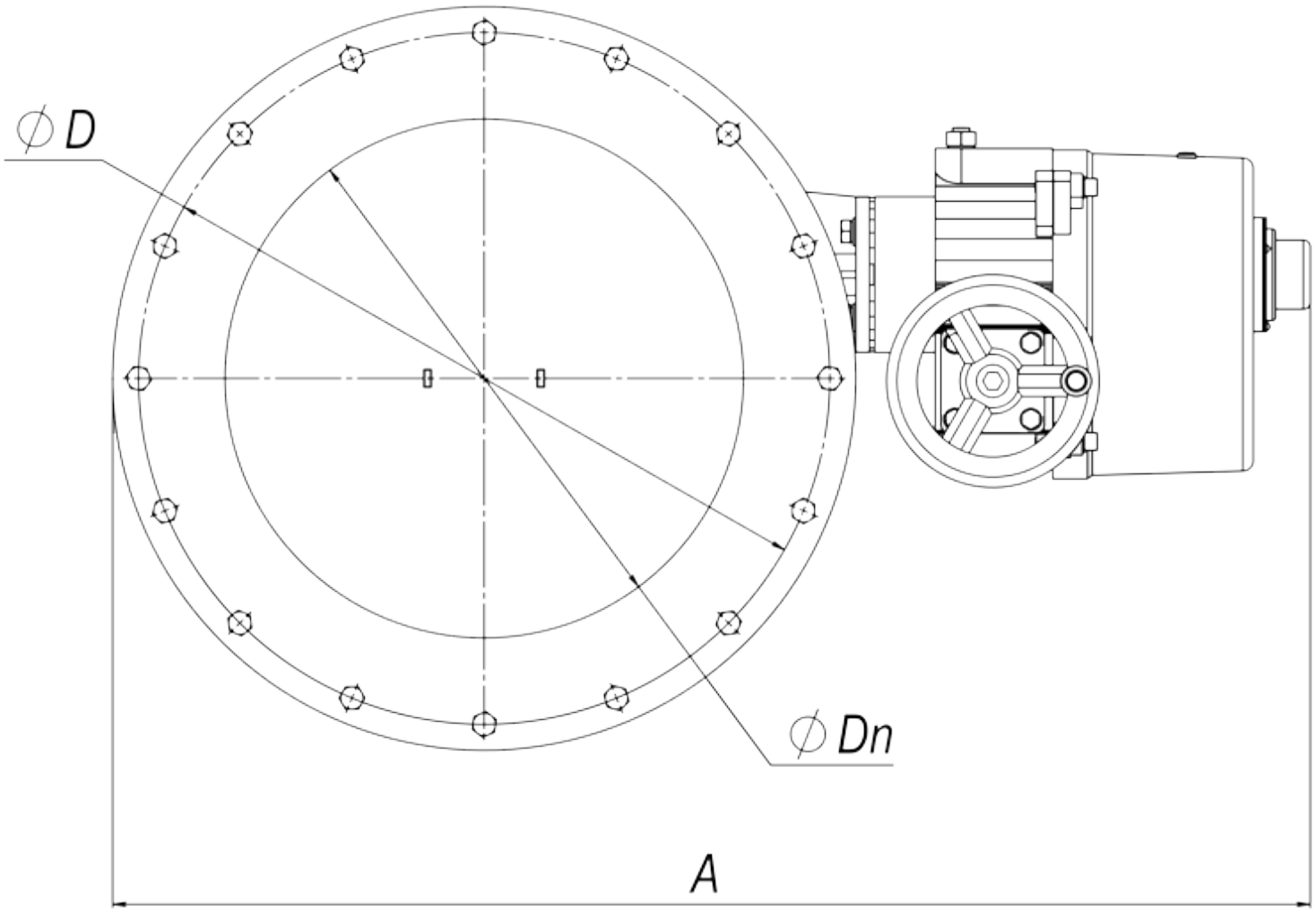
∅D
∅Dn
A

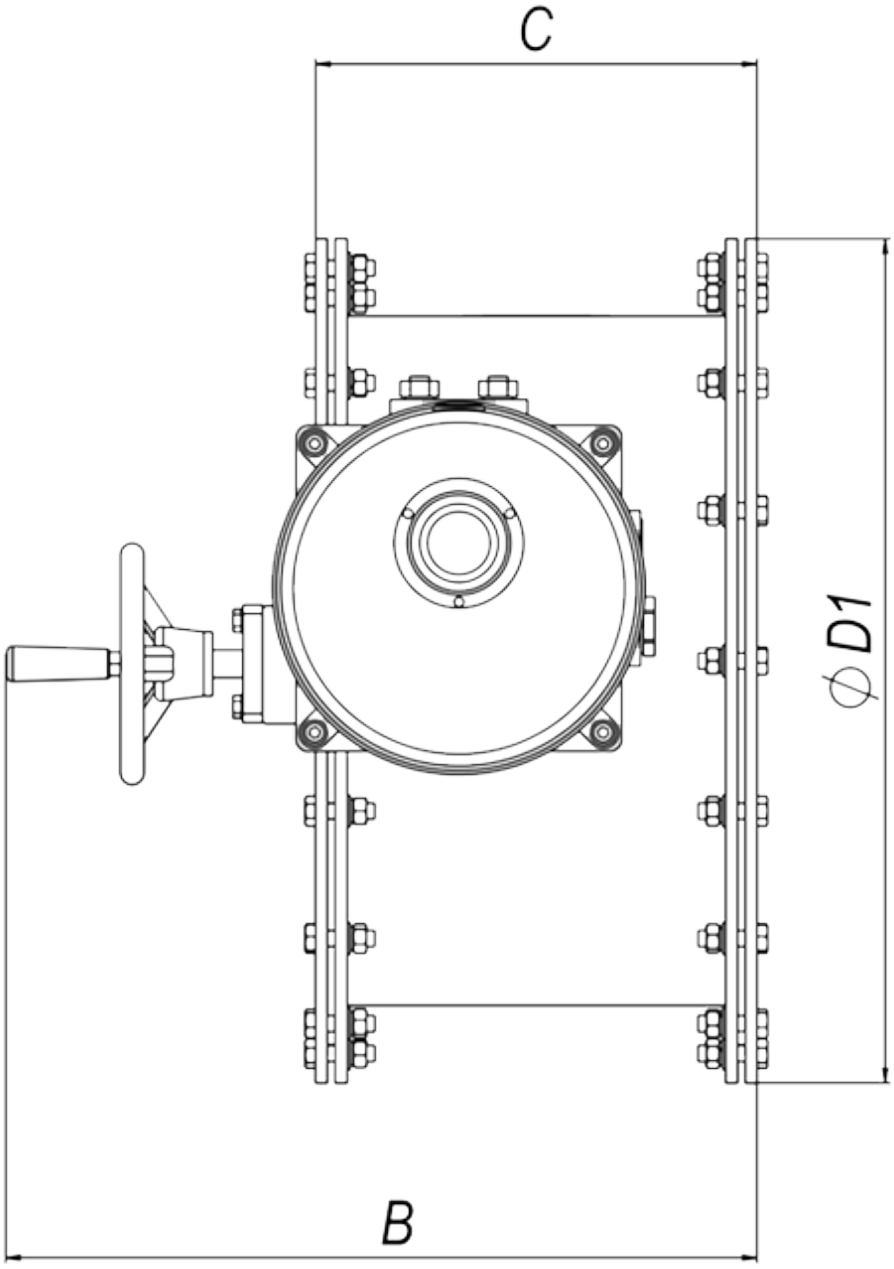
C
ϕ D1
B