GKE-300

Airtight ventilation valve with an electric actuator

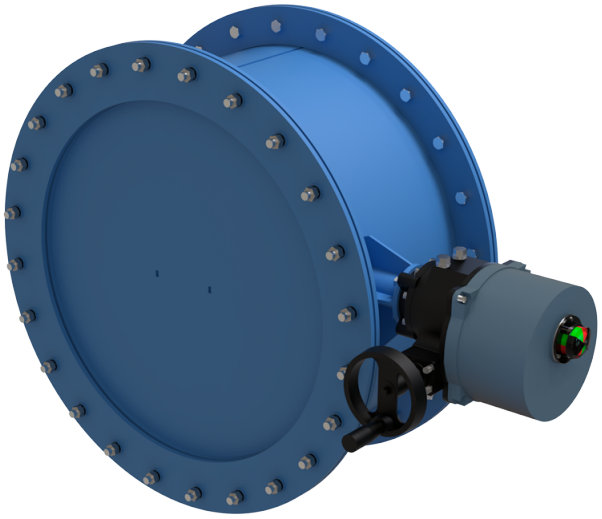

	Unit of measurement	GKE-300
Connected air duct size	mm	300
Weight	kg	45

Dimensions

Dn	D	D1	A	B	C
300	400	430	695	390	205

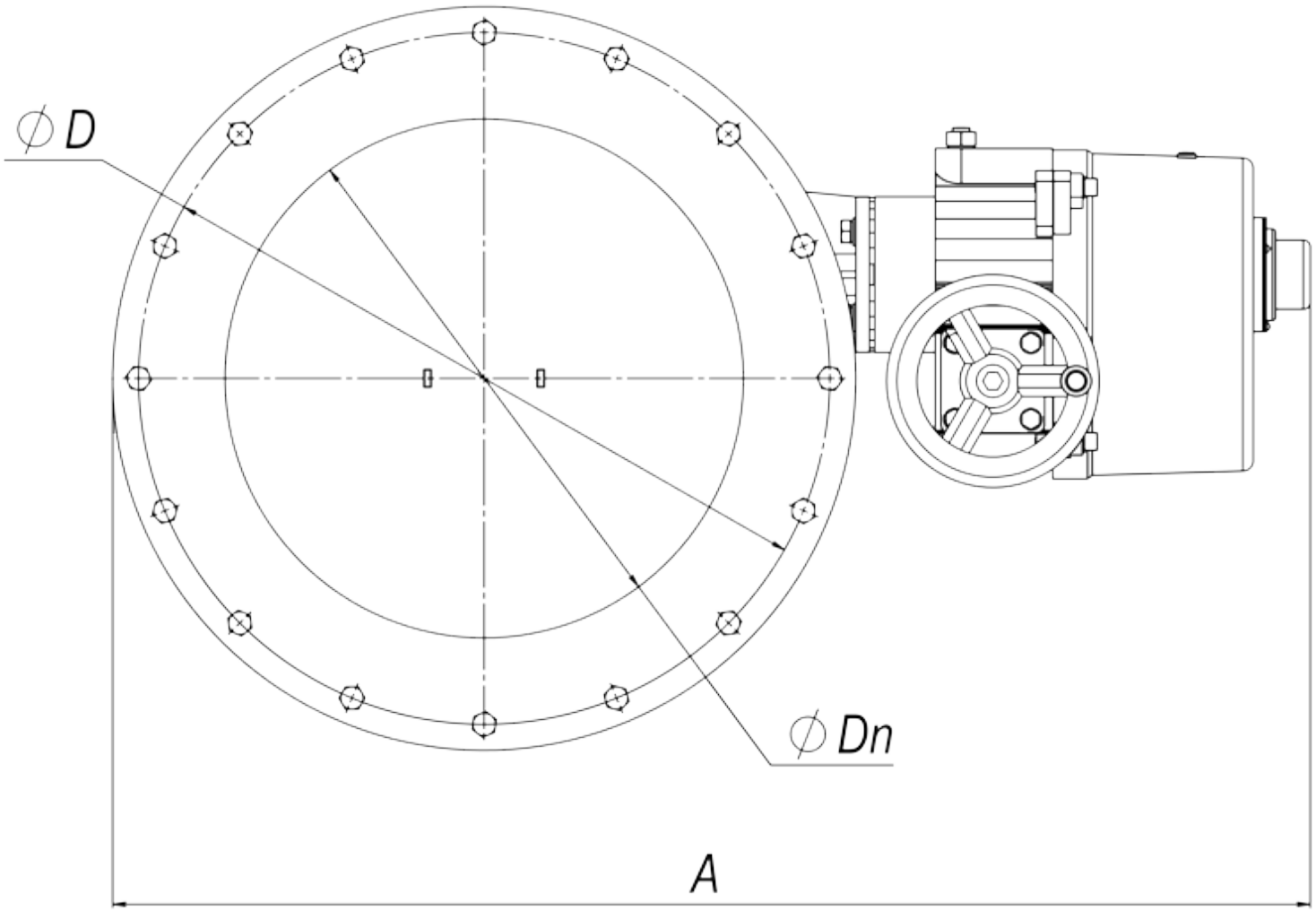
∅D
∅Dn
A

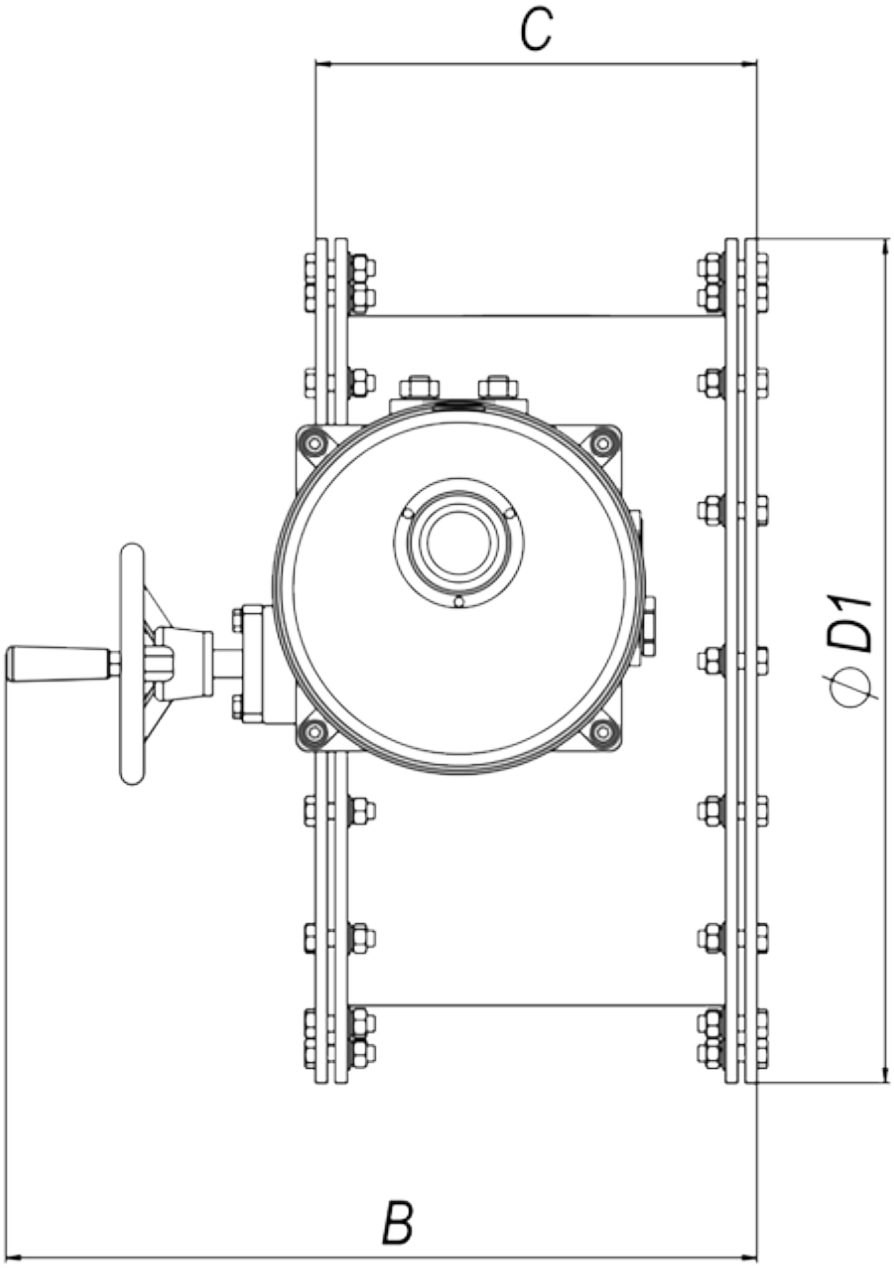
C
ϕ D1
B