GKE-315

Airtight ventilation valve with an electric actuator

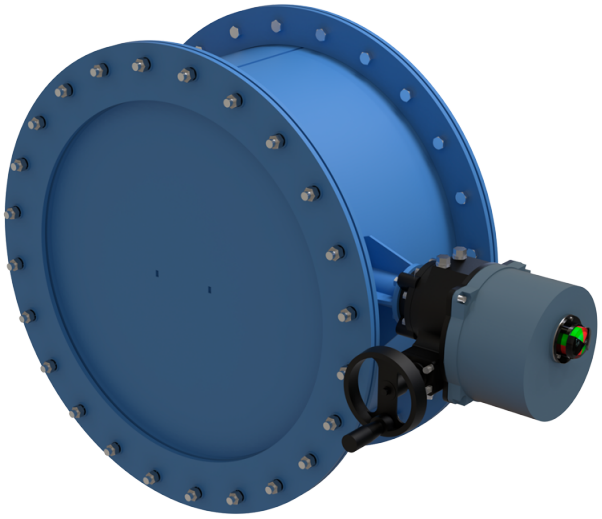

	Unit of measurement	GKE-315
Connected air duct size	mm	315
Weight	kg	61.5

Dimensions

Dn	D	D1	A	B	C
315	420	460	785	410	236

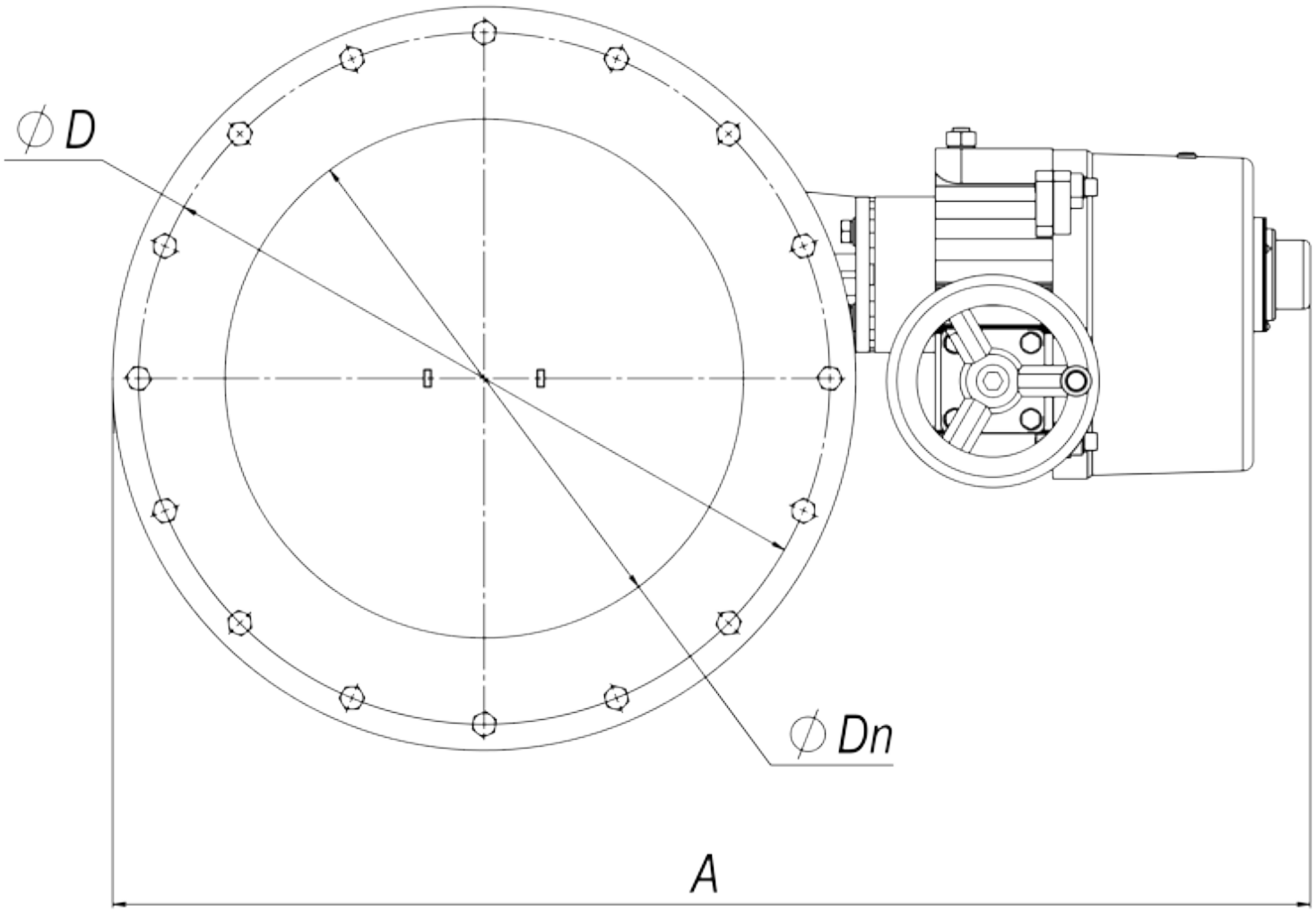
∅D
∅Dn
A

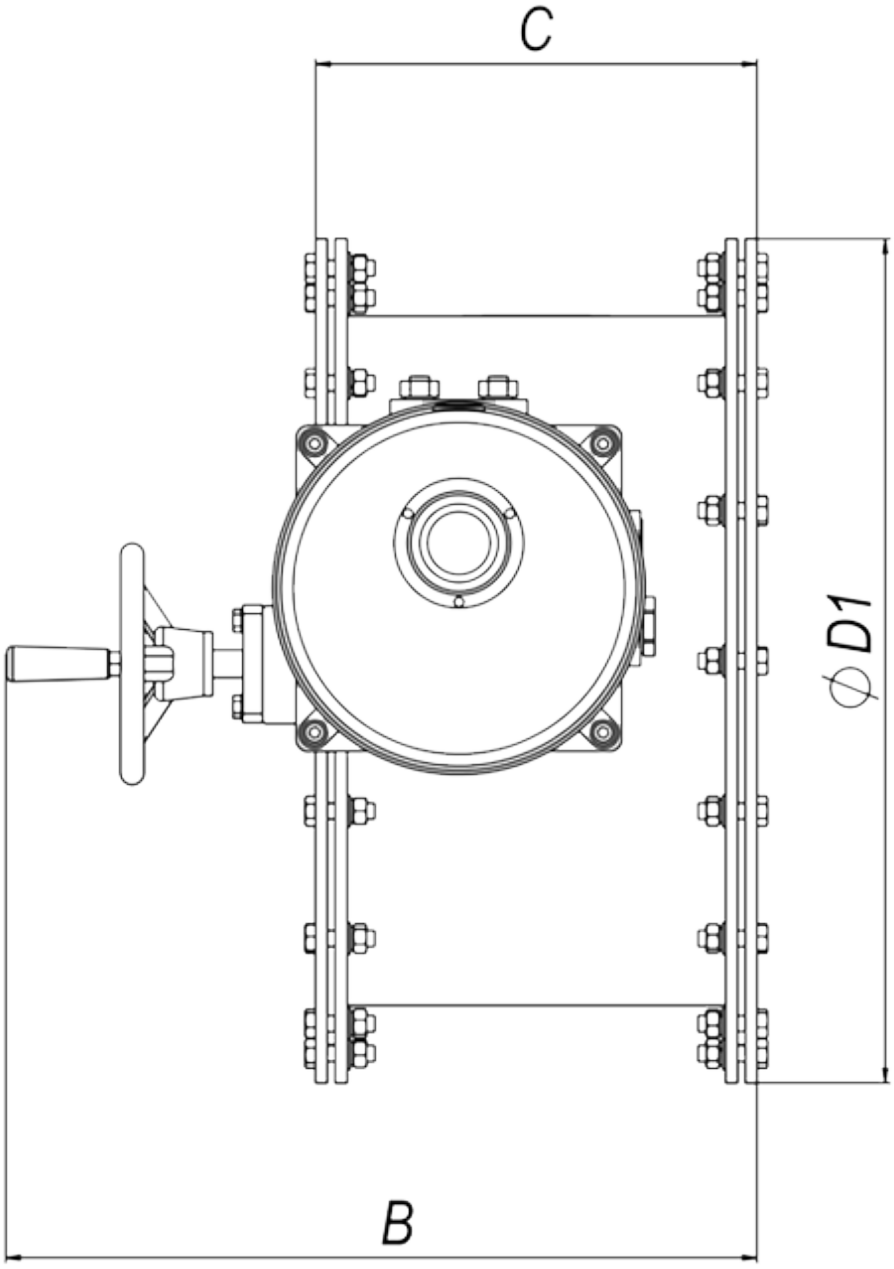
C
ϕ D1
B