GKE-355

Airtight ventilation valve with an electric actuator

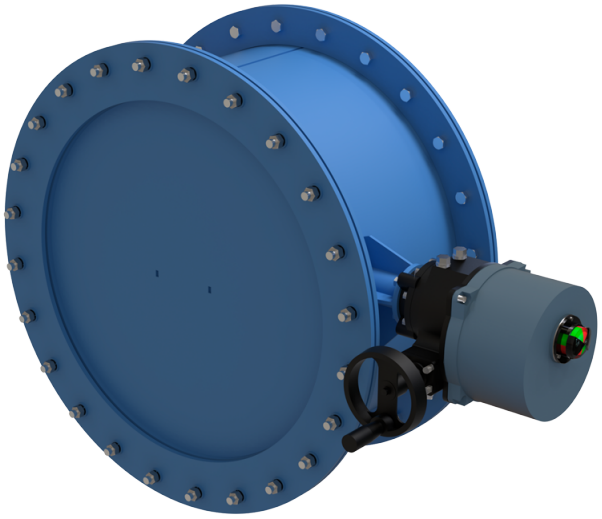

	Unit of measurement	GKE-355
Connected air duct size	mm	355
Weight	kg	68

Dimensions

Dn	D	D1	A	B	C
355	450	490	815	450	276

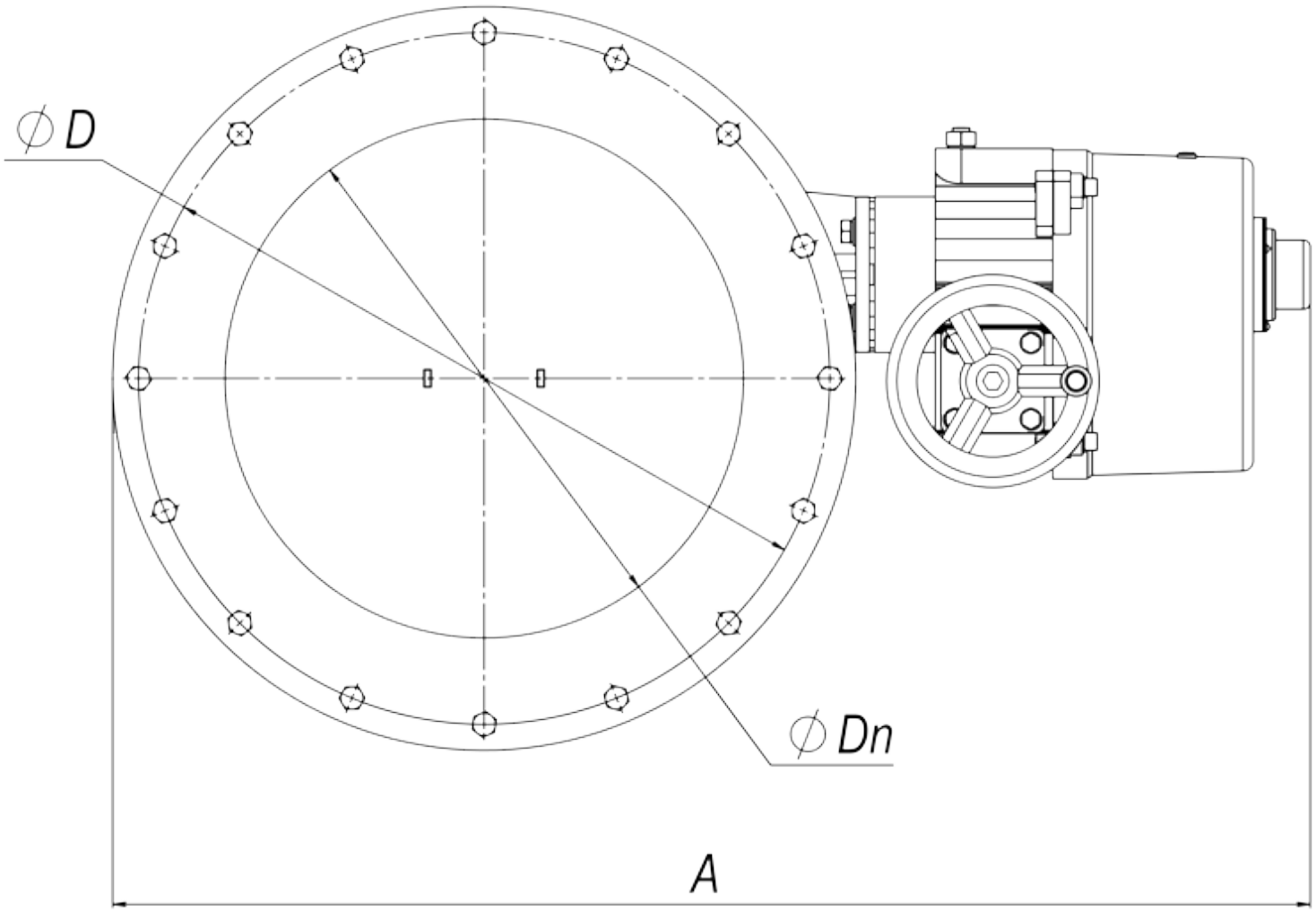
∅D
∅Dn
A

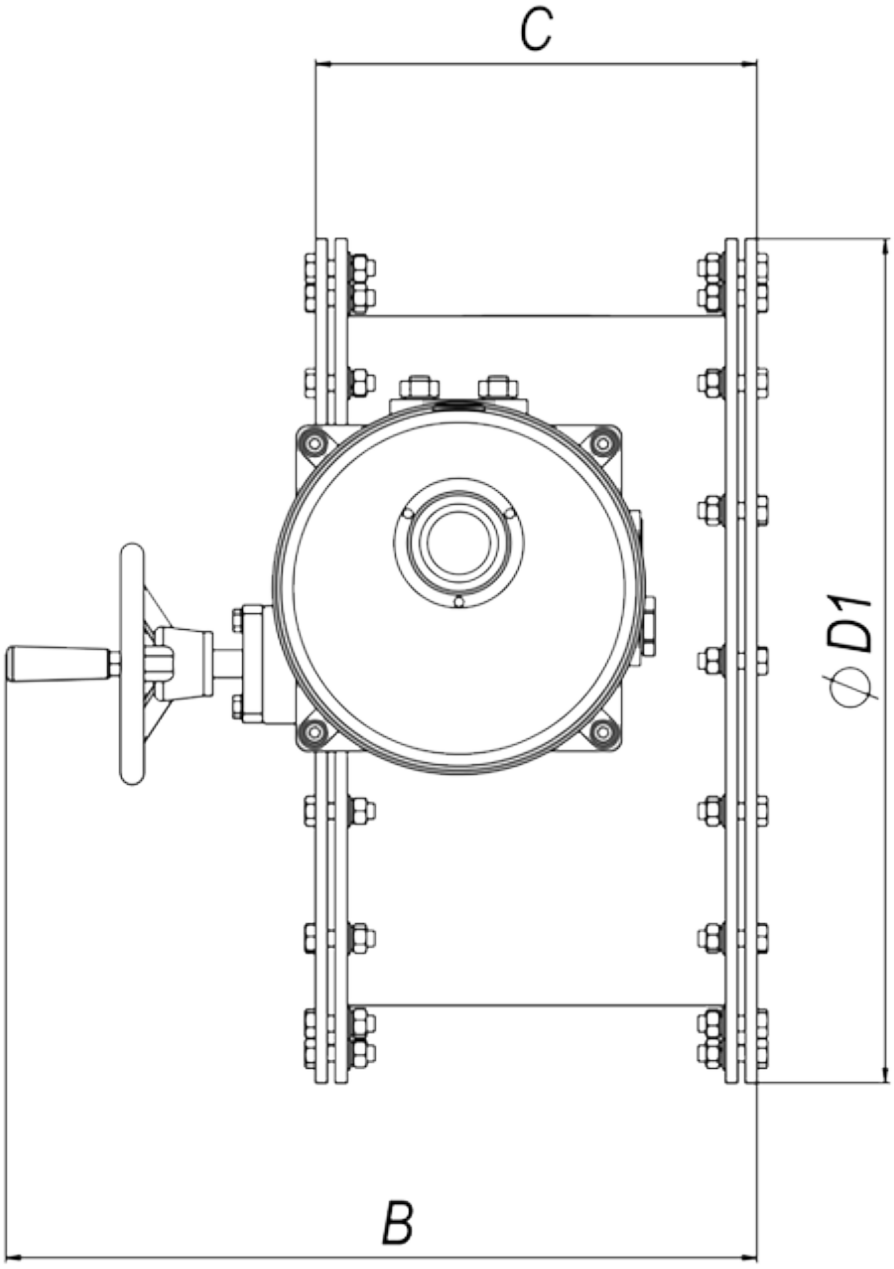
C
ϕ D1
B