GKE-400

Airtight ventilation valve with an electric actuator

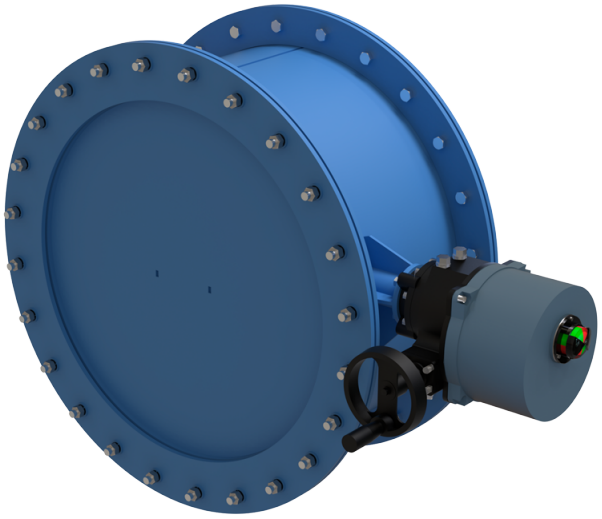

	Unit of measurement	GKE-400
Connected air duct size	mm	400
Weight	kg	75

Dimensions

Dn	D	D1	A	B	C
400	500	530	855	470	296

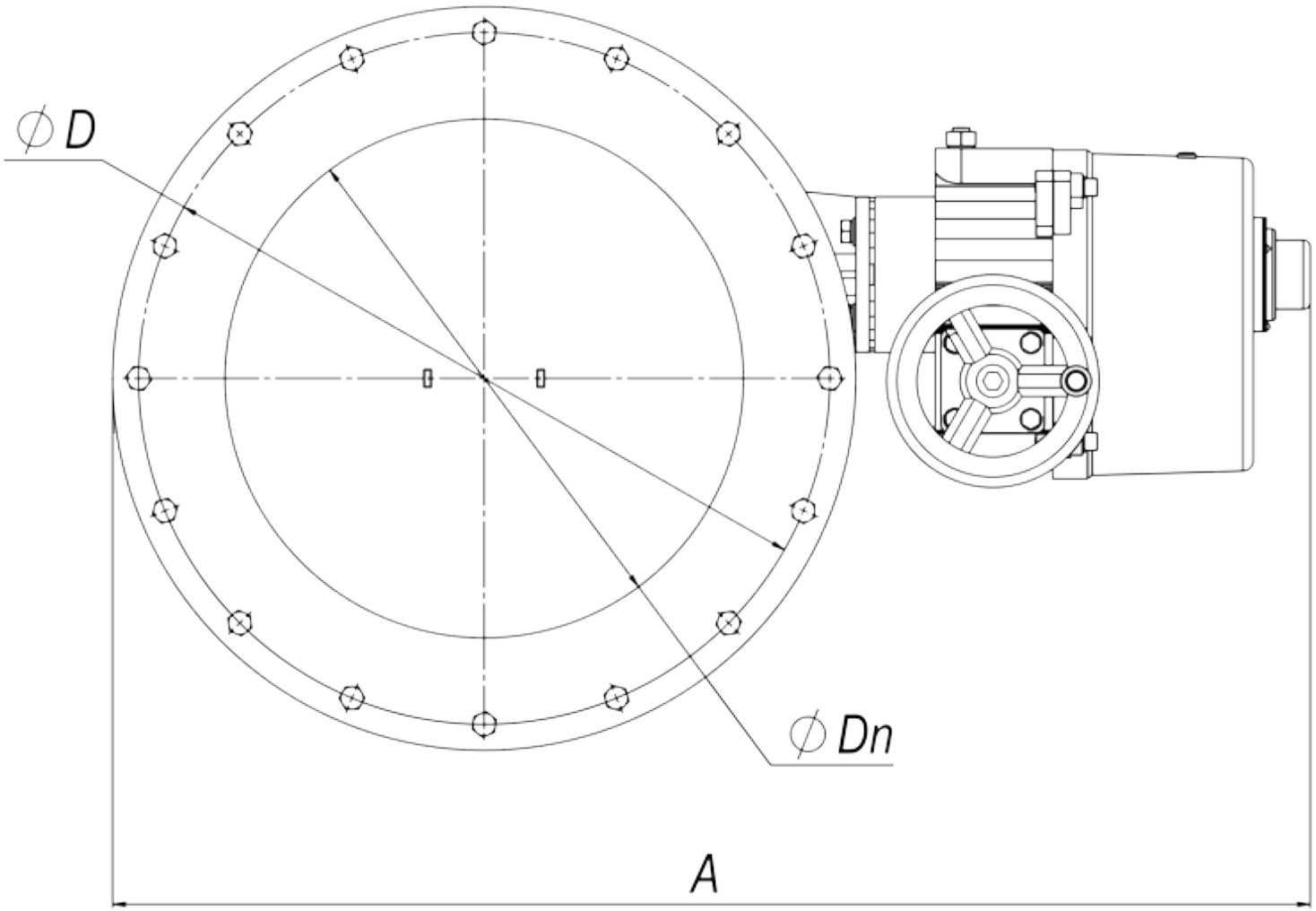
∅D
∅Dn
A

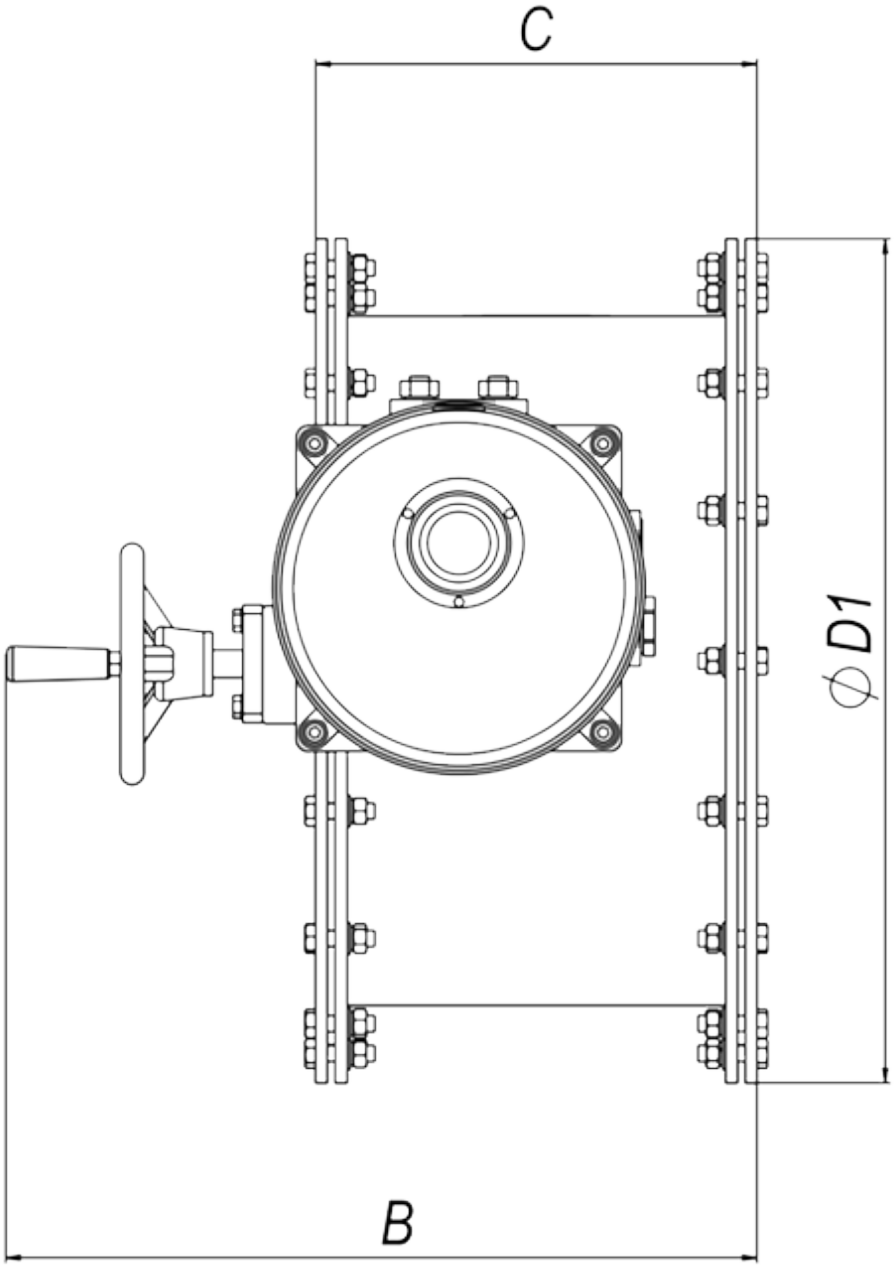
C
ϕ D1
B