GKE-450

Airtight ventilation valve with an electric actuator

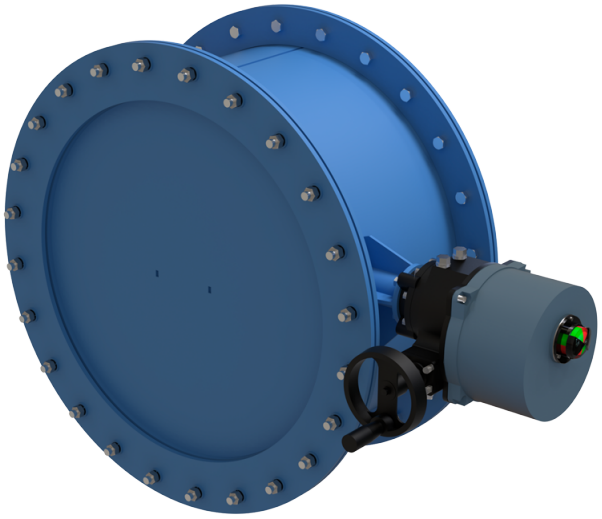

	Unit of measurement	GKE-450
Connected air duct size	mm	450
Weight	kg	90

Dimensions

Dn	D	D1	A	B	C
450	550	600	930	470	296

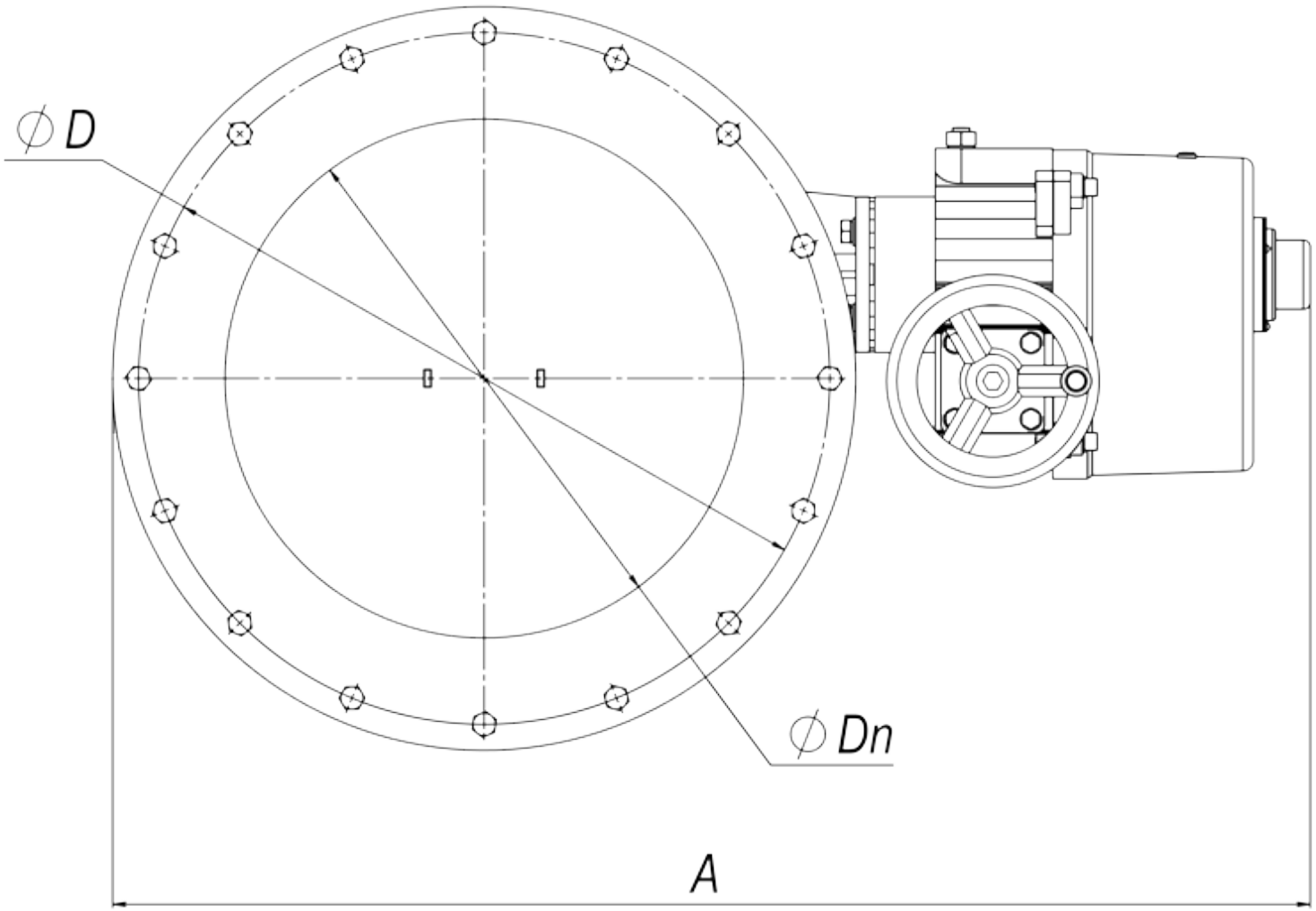
∅D
∅Dn
A

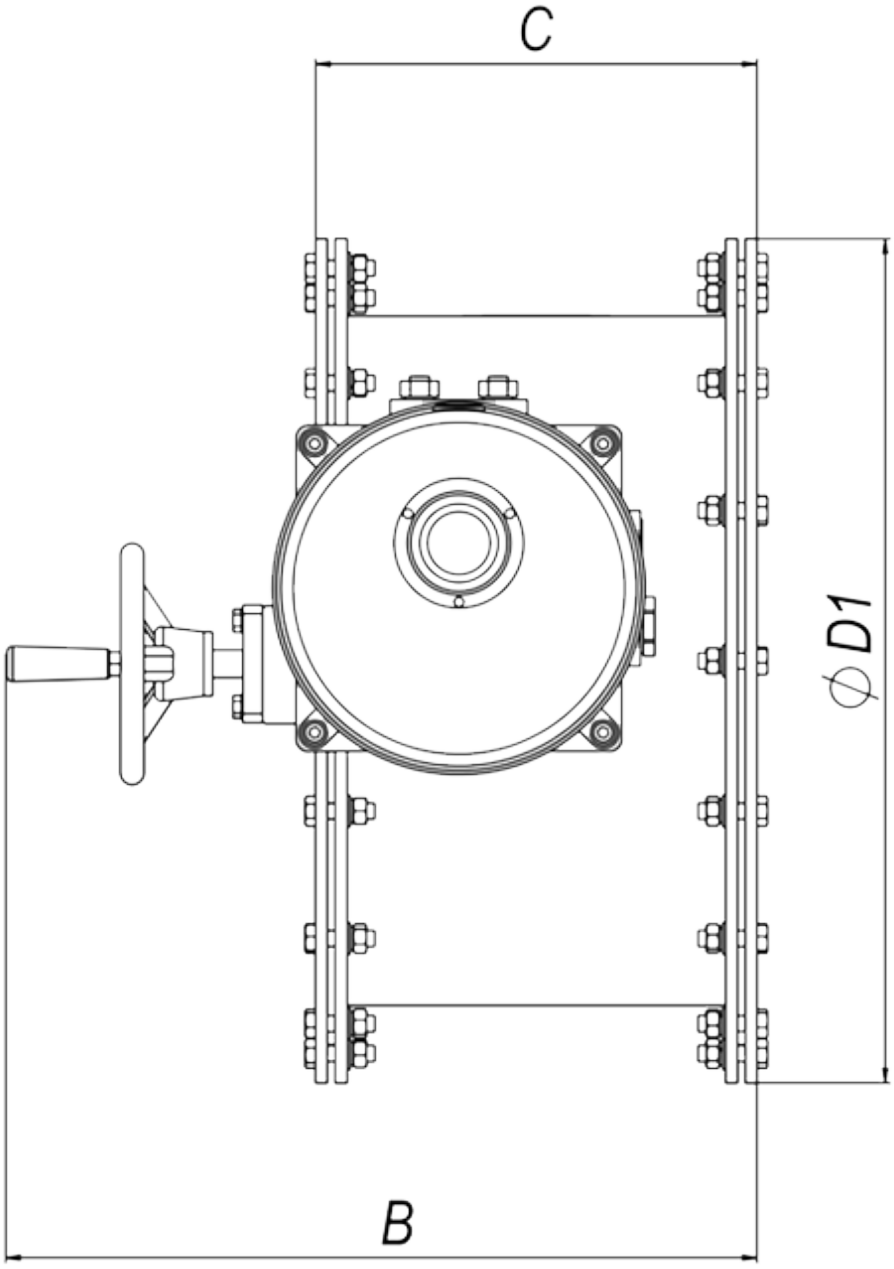
C
ϕ D1
B