GKE-500

Airtight ventilation valve with an electric actuator

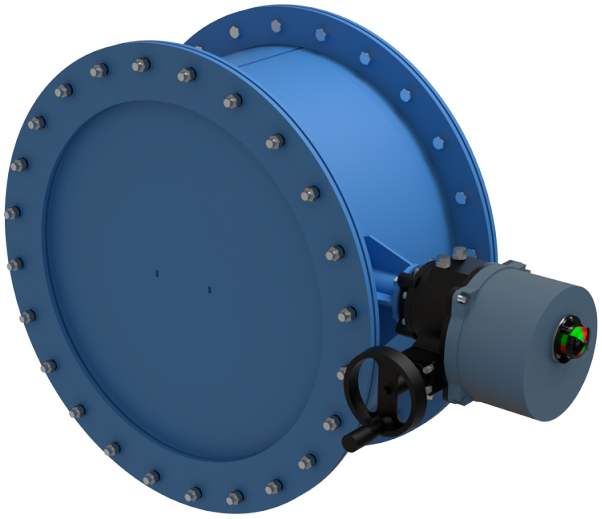

	Unit of measurement	GKE-500
Connected air duct size	mm	500
Weight	kg	104

Dimensions

Dn	D	D1	A	B	C
500	620	670	975	470	296

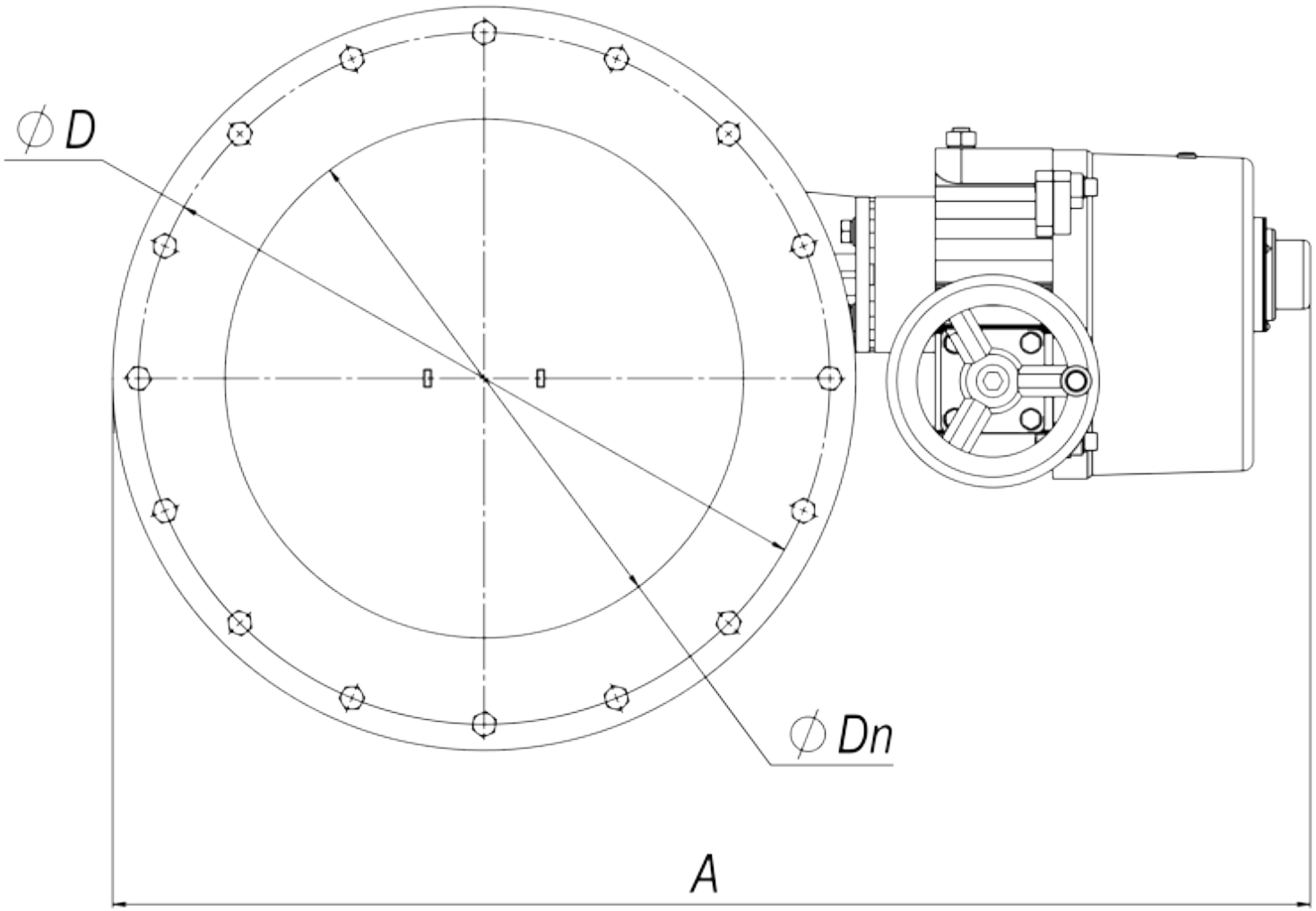
∅D
∅Dn
A

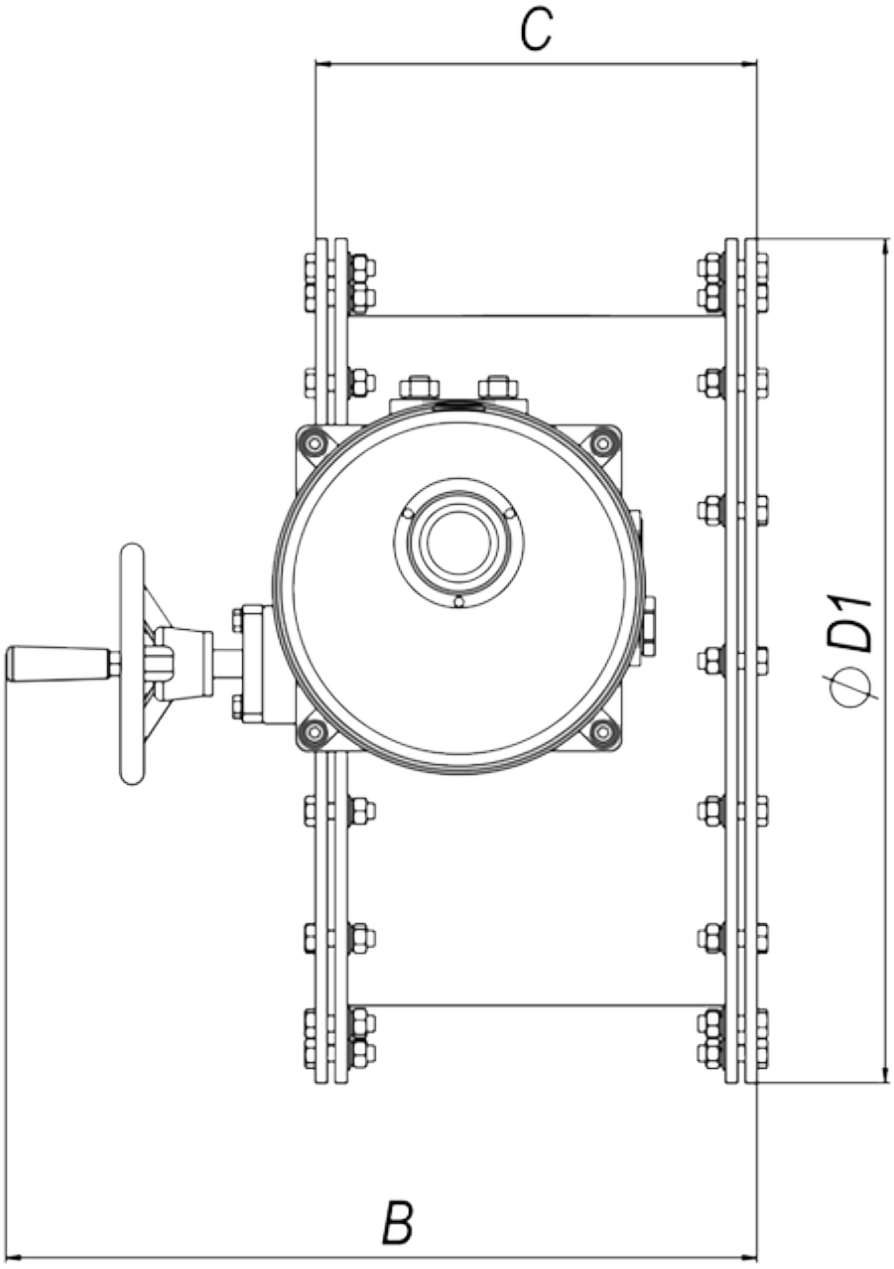
C
ϕ D1
B