GKE-560

Airtight ventilation valve with an electric actuator

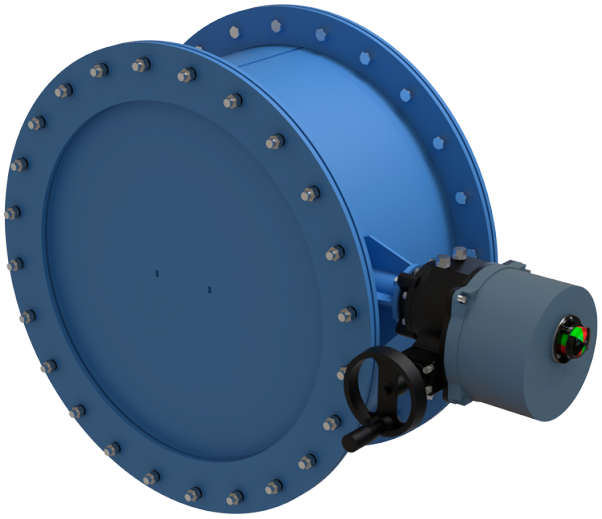

	Unit of measurement	GKE-560
Connected air duct size	mm	560
Weight	kg	116.5

Dimensions

Dn	D	D1	A	B	C
560	670	730	995	460	296

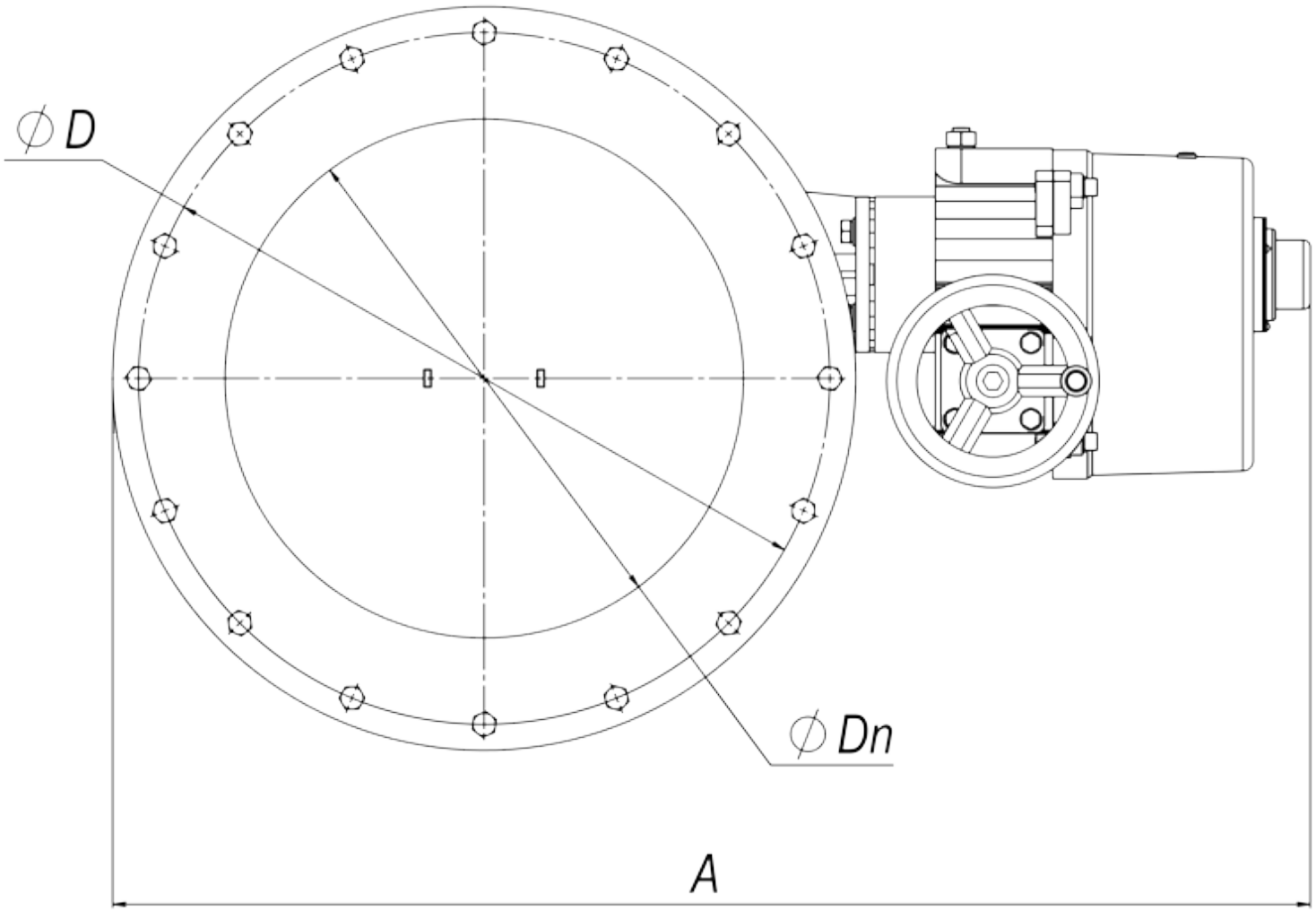
∅D
∅Dn
A

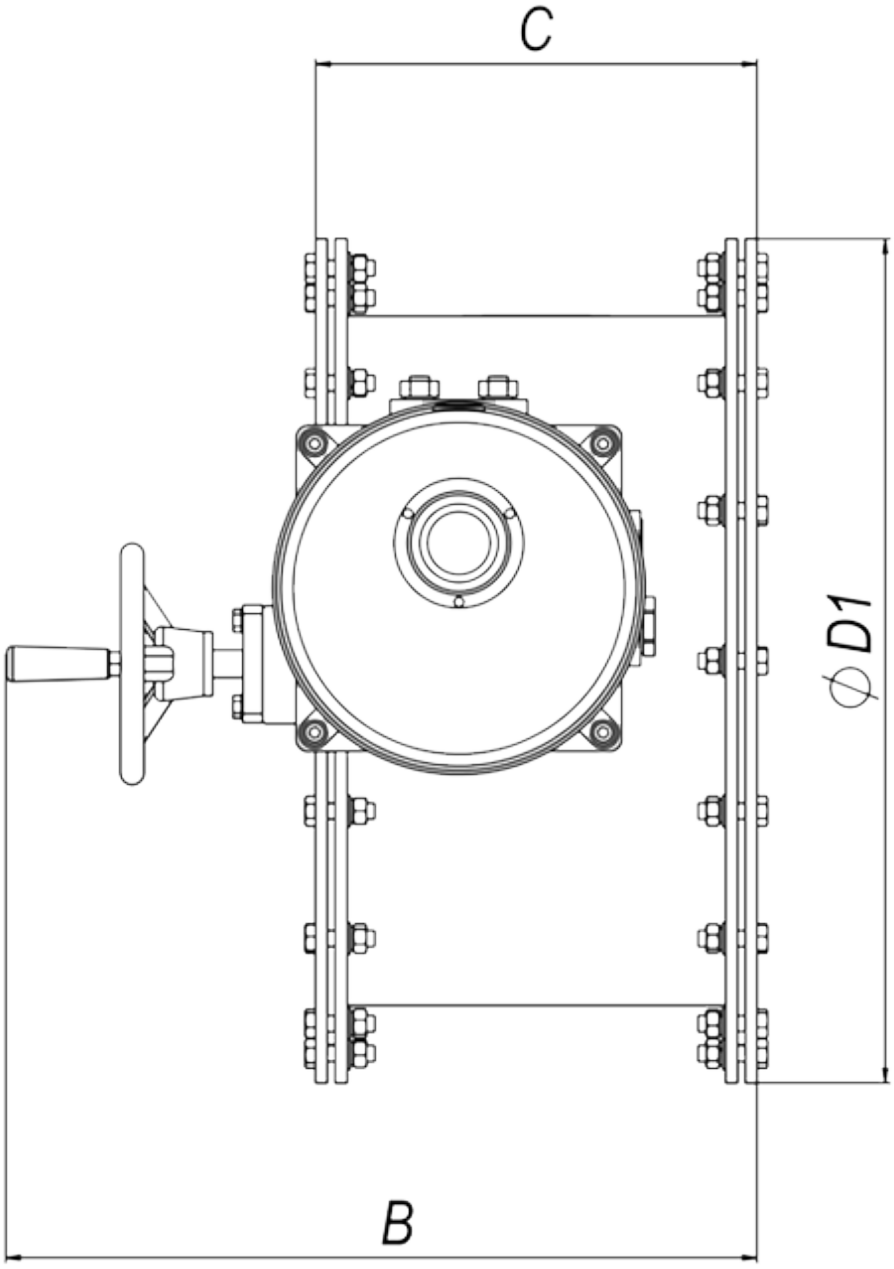
C
ϕ D1
B