# GKE-600

Airtight ventilation valve with an electric actuator

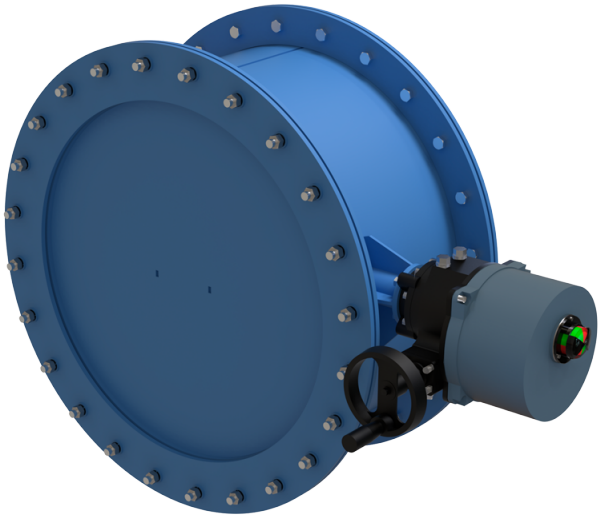

| | Unit of measurement | GKE-600 |
|---|---|---|
| Connected air duct size | mm | 600 |
| Weight | kg | 125 |

## Dimensions

| Dn | D | D1 | A | B | C |
|---|---|---|---|---|---|
| 600 | 720 | 770 | 1035 | 460 | 296 |

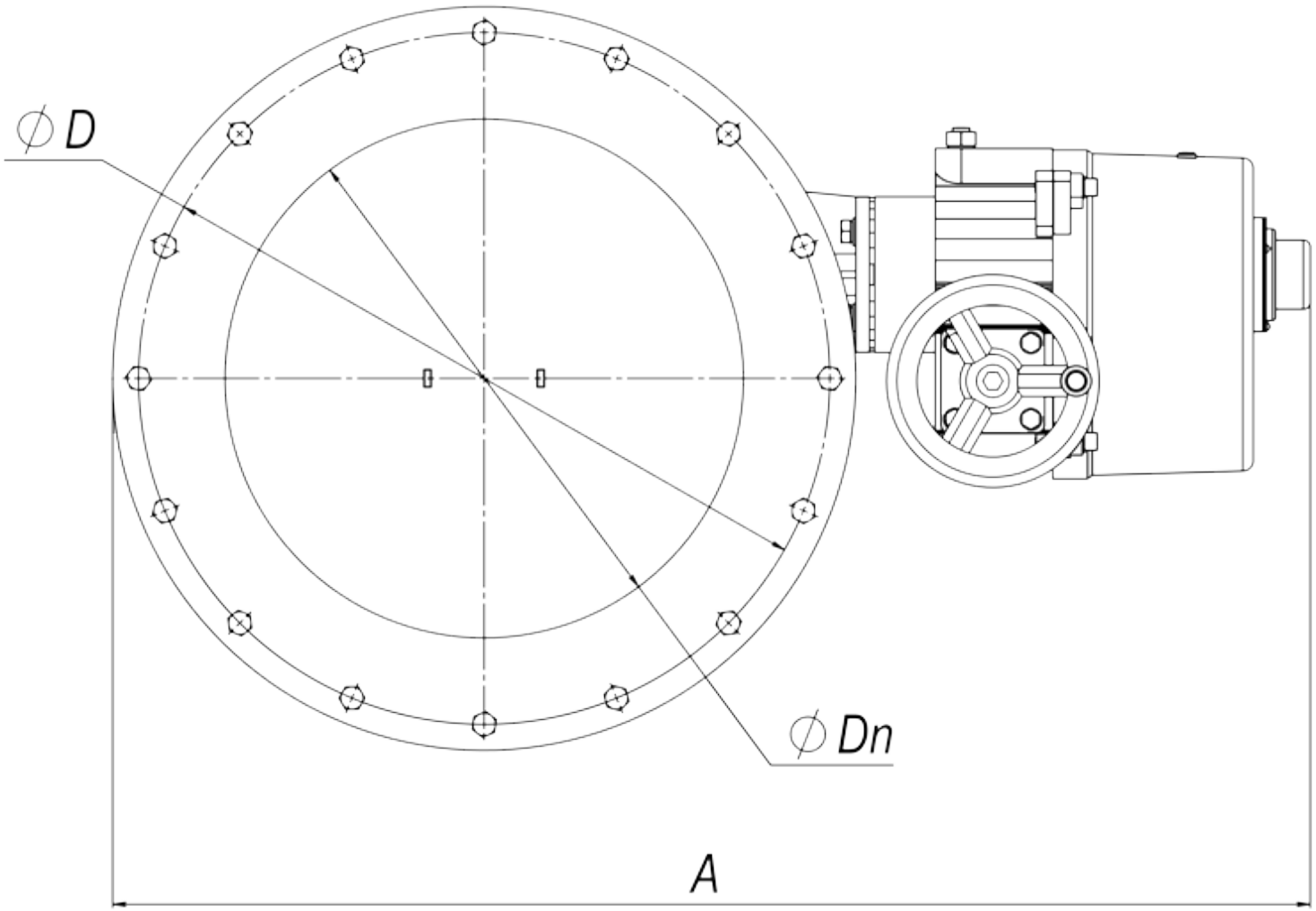
∅D
∅Dn
A

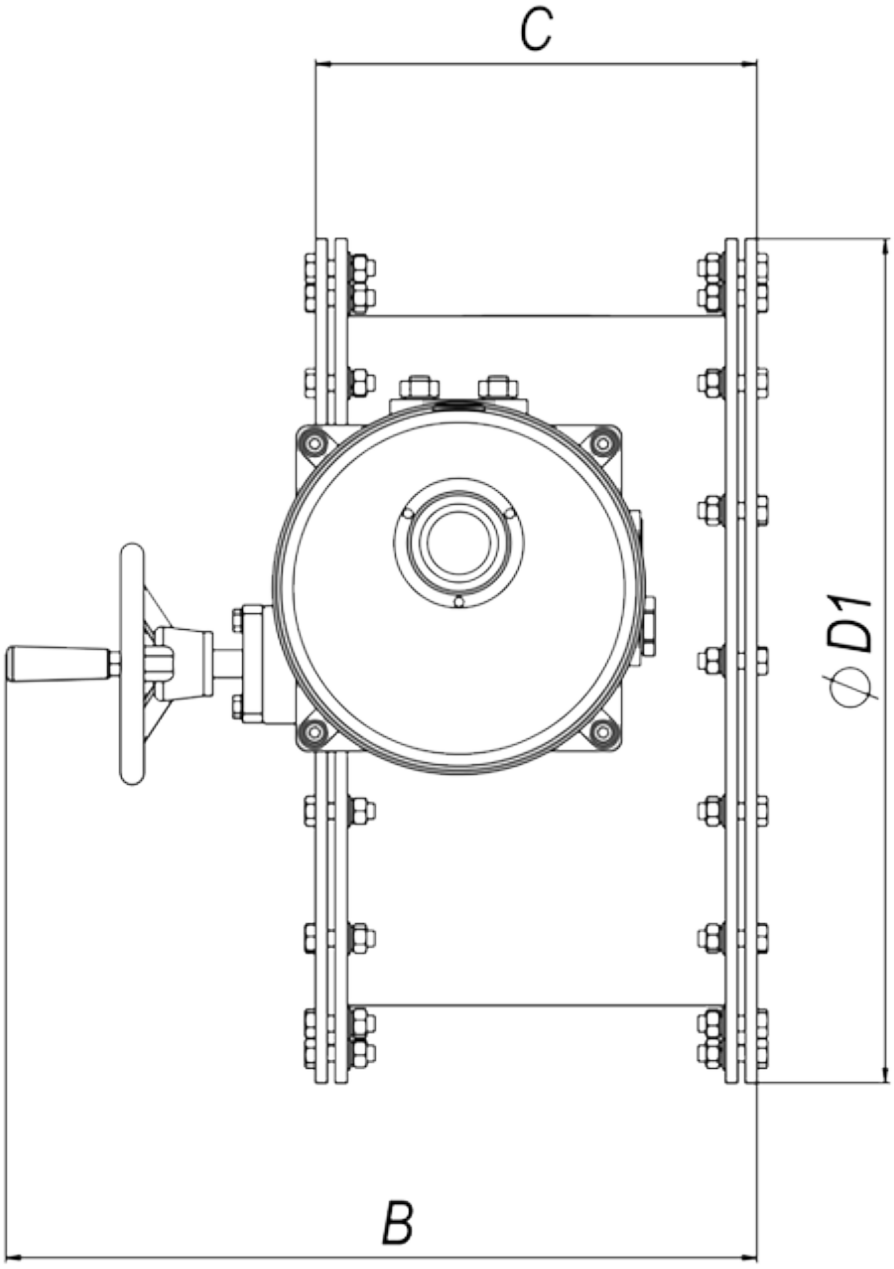
C
ϕ D1
B