GKE-630

Airtight ventilation valve with an electric actuator

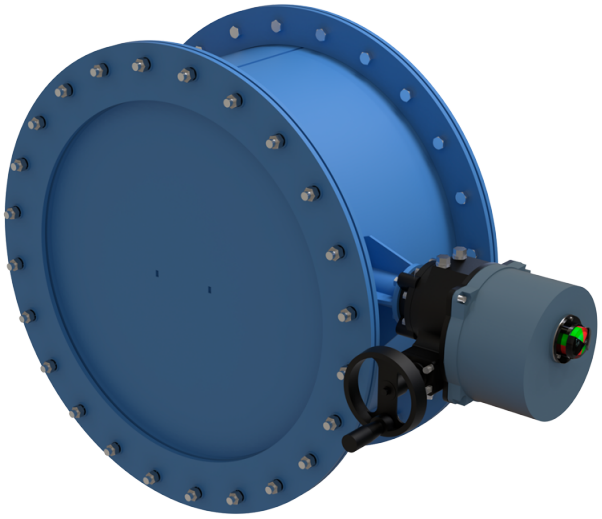

	Unit of measurement	GKE-630
Connected air duct size	mm	630
Weight	kg	154.5

Dimensions

Dn	D	D1	A	B	C
630	740	800	1125	545	356

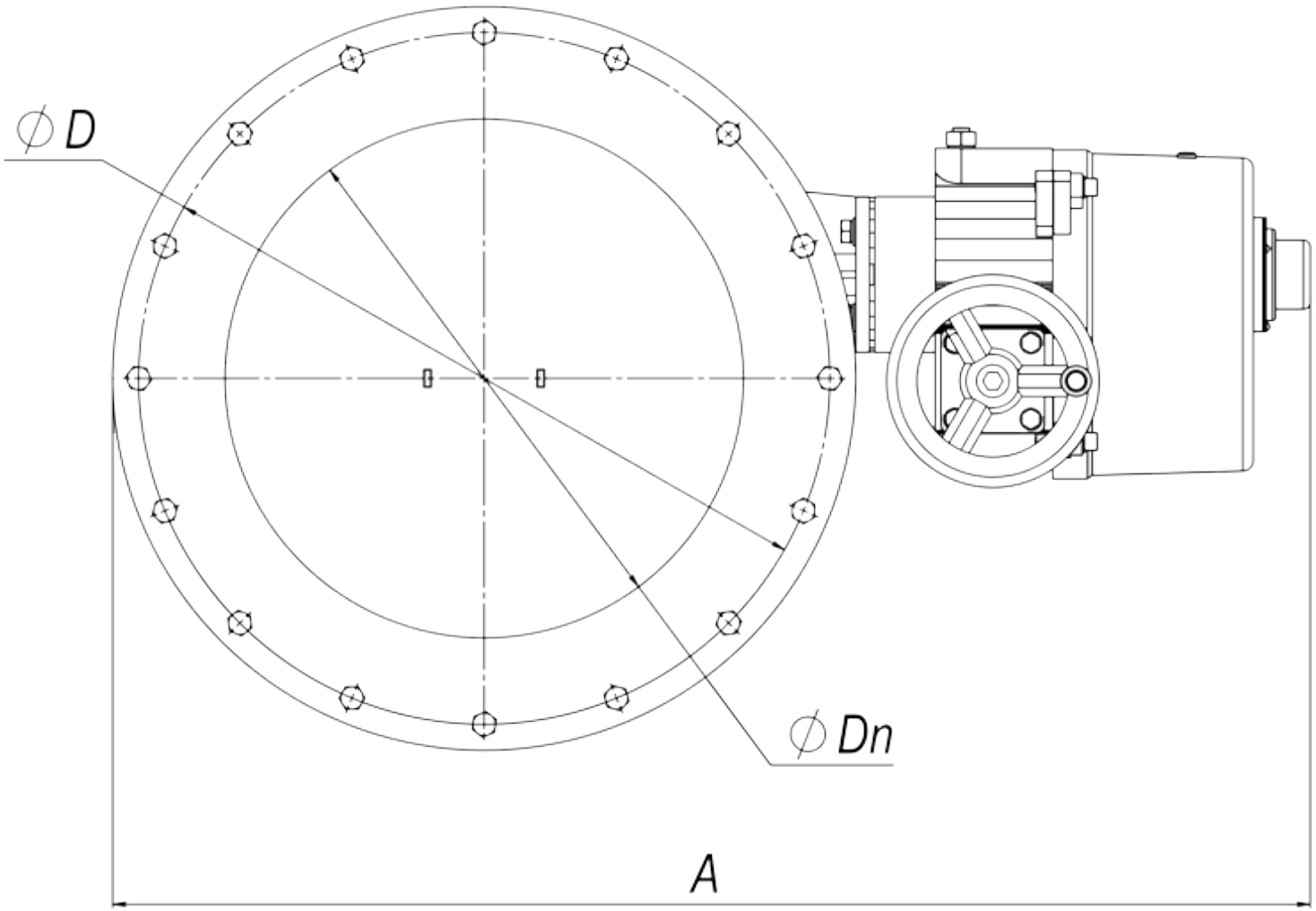
∅D
∅Dn
A

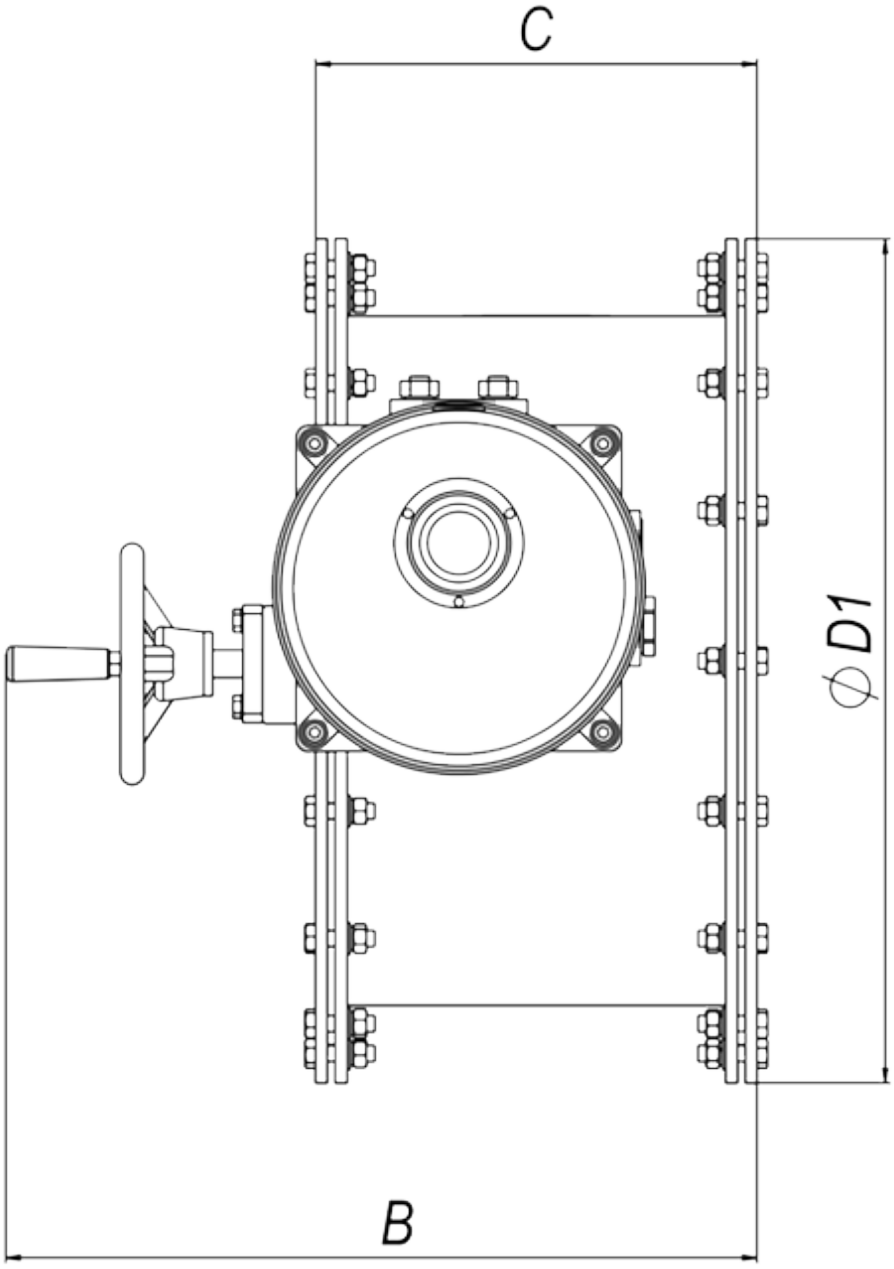
C
ϕ D1
B