GKE-710

Airtight ventilation valve with an electric actuator

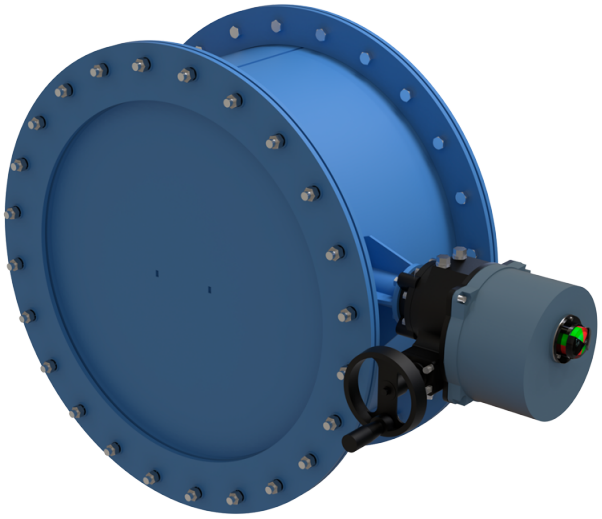

	Unit of measurement	GKE-710
Connected air duct size	mm	710
Weight	kg	170.5

Dimensions

Dn	D	D1	A	B	C
710	820	880	1205	545	356

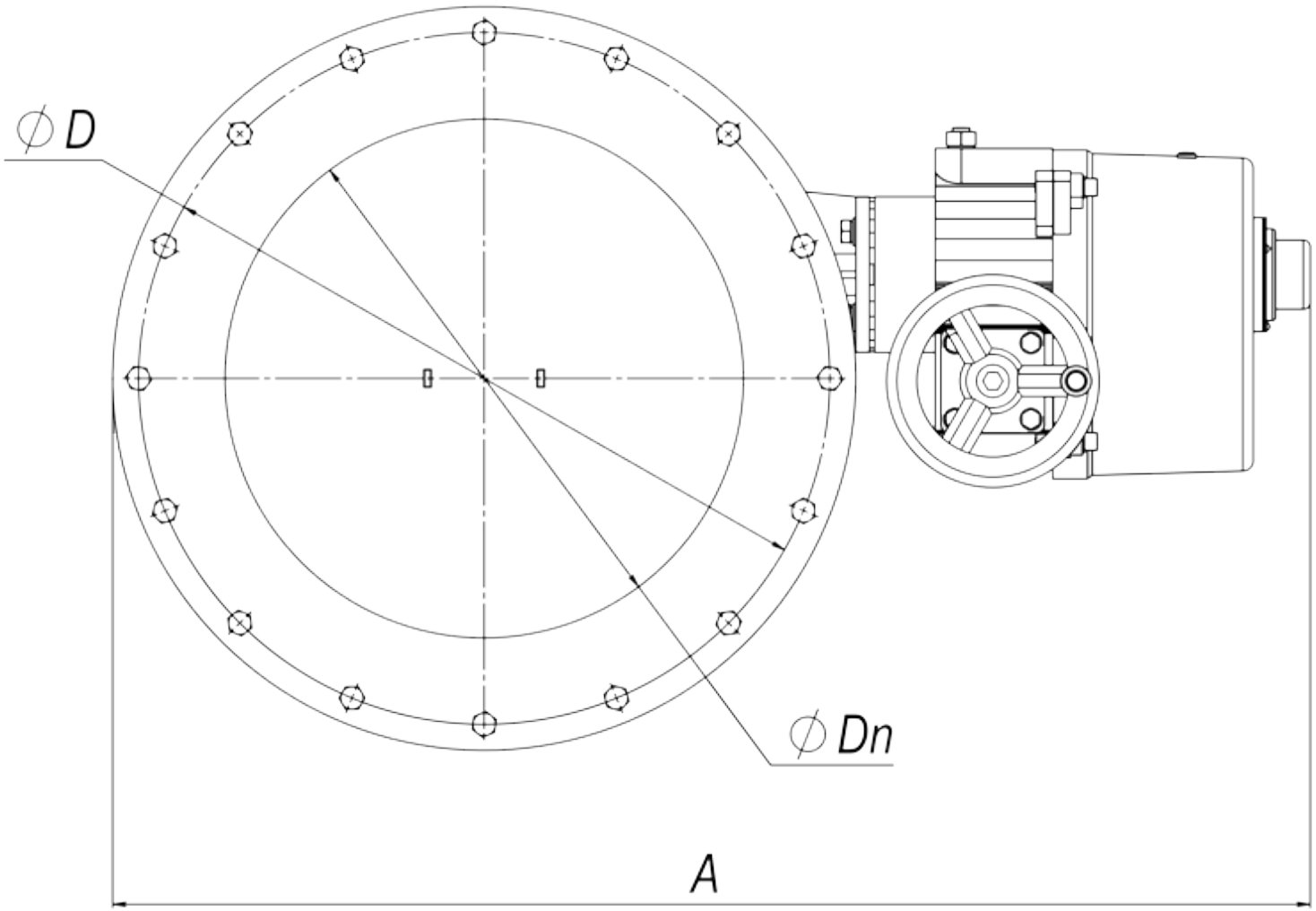
∅D
∅Dn
A

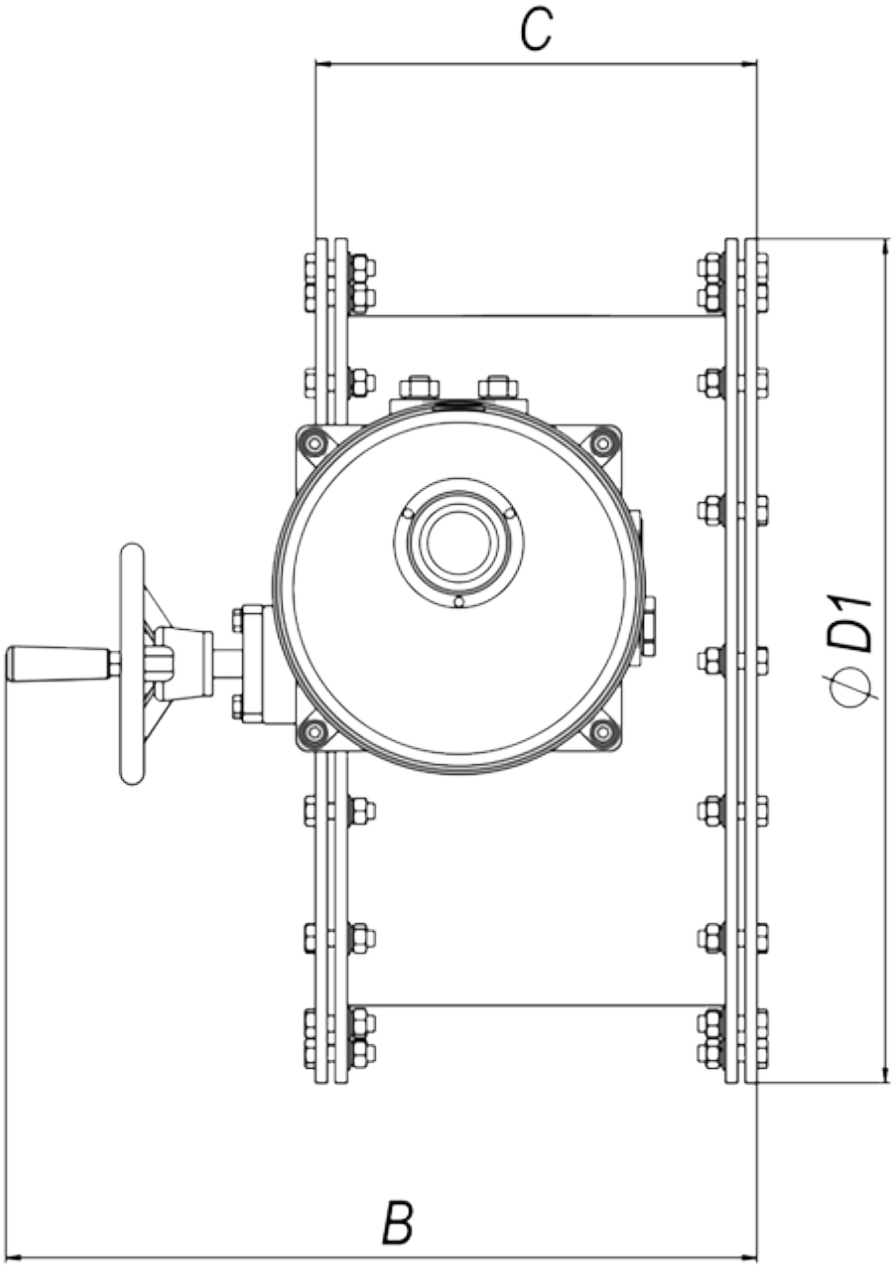
C
ϕ D1
B