GKE-800

Airtight ventilation valve with an electric actuator

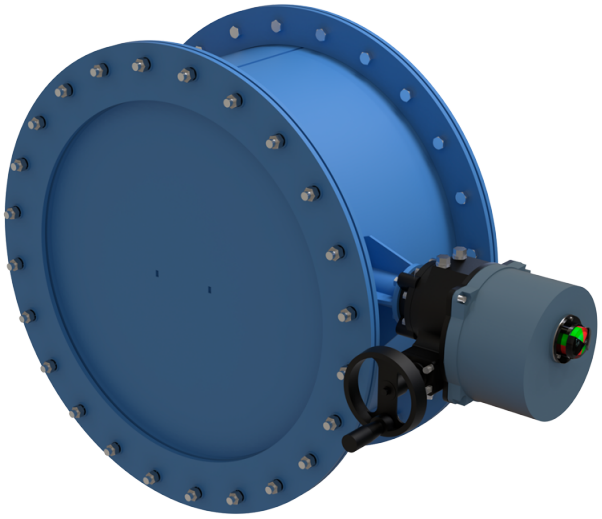

	Unit of measurement	GKE-800
Connected air duct size	mm	800
Weight	kg	189

Dimensions

Dn	D	D1	A	B	C
800	910	970	1295	545	356

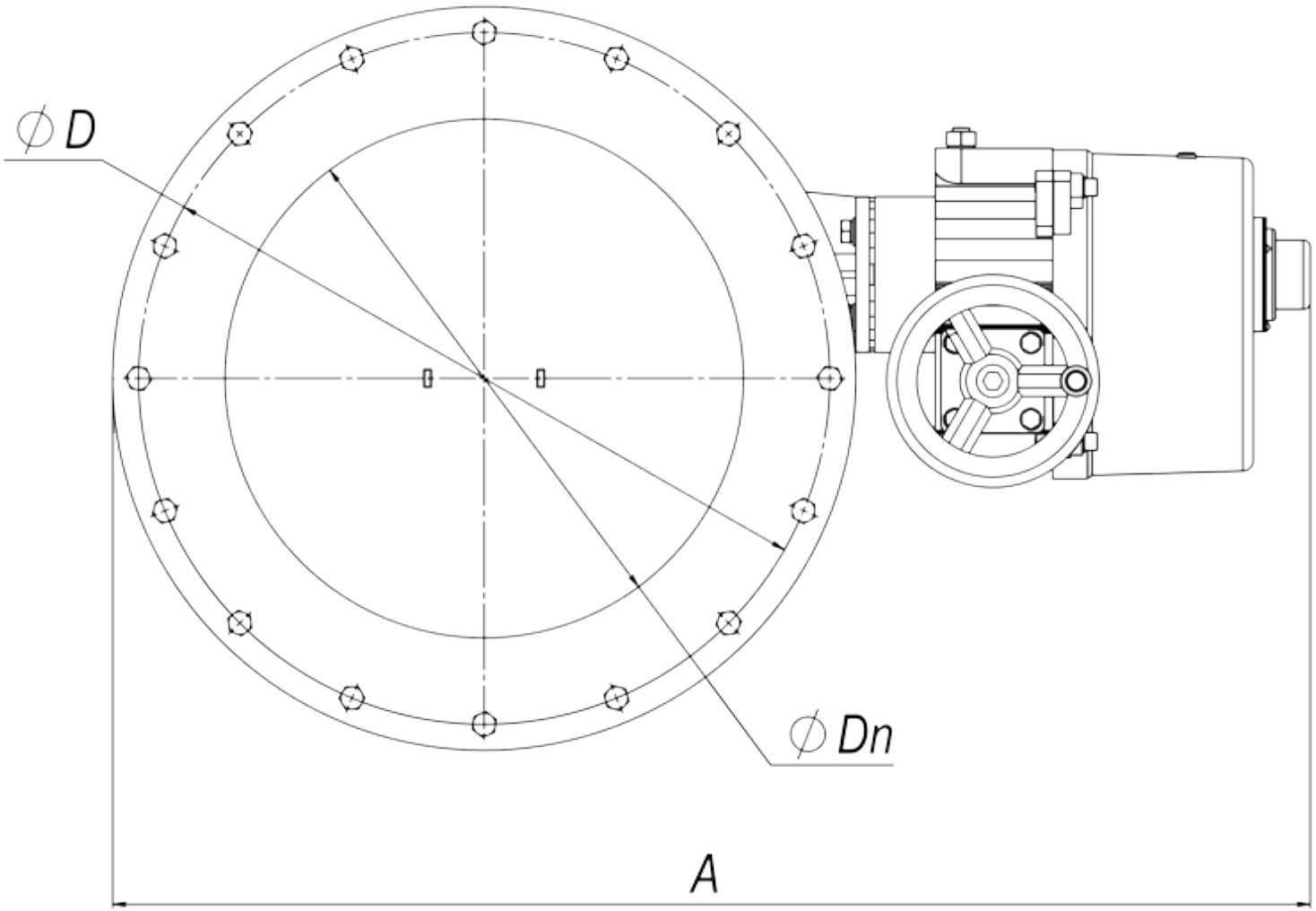
∅D
∅Dn
A

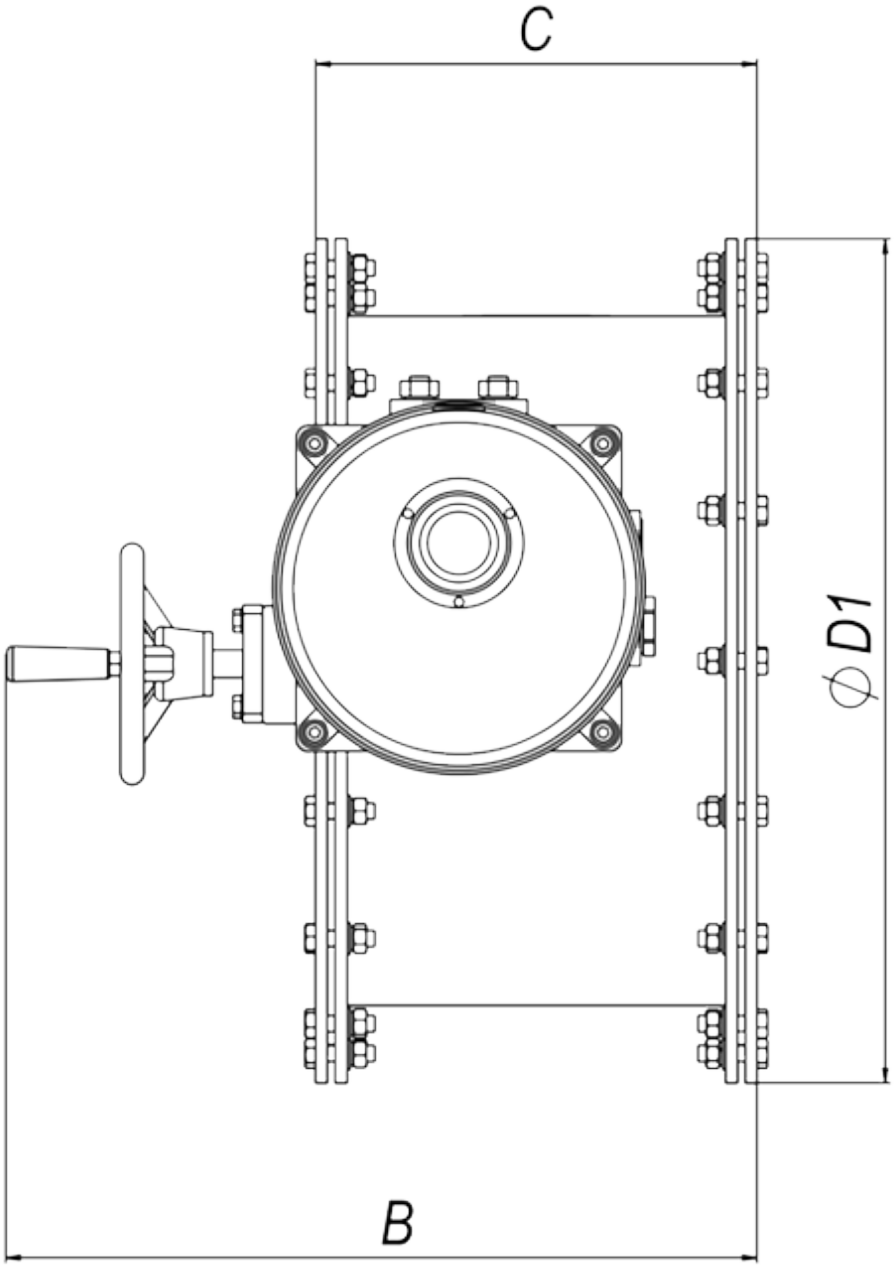
C
ϕ D1
B