GR 400x300

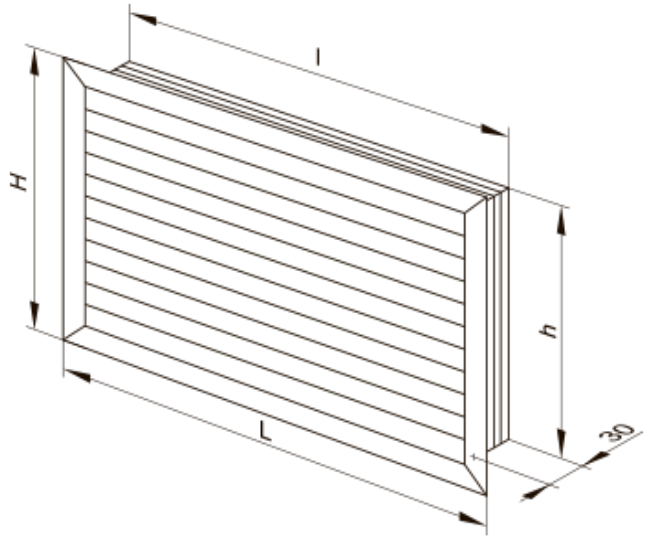

Ventilation grille with gravity shutters

• Casing material: Plastic

	Unit of measurement	GR 400x300

Dimensions

H	L	h	l
303	422	289	408

