HBF 250 Square TH

Ceiling-mounted centrifugal high-performance fans for extract ventilation in a plastic casing

- Sound pressure level LpA at 3 m: 36
- Backdraft protection: Backdraft damper
- Humidity sensor
- Timer: Turn off timer



	Unit of measurement	HBF 250 Square TH
Minimum supply voltage	V	220
Maximum supply voltage	V	240
Power supply frequency	Hz	50
Rated power	W	57
Unit current	A	0.25
Maximum airflow	m³/h	482
Rotation speed at 50hz	-	1085
Sound pressure level LpA at 3 m	dB(A)	36
Ingress protection rating	-	IPX4

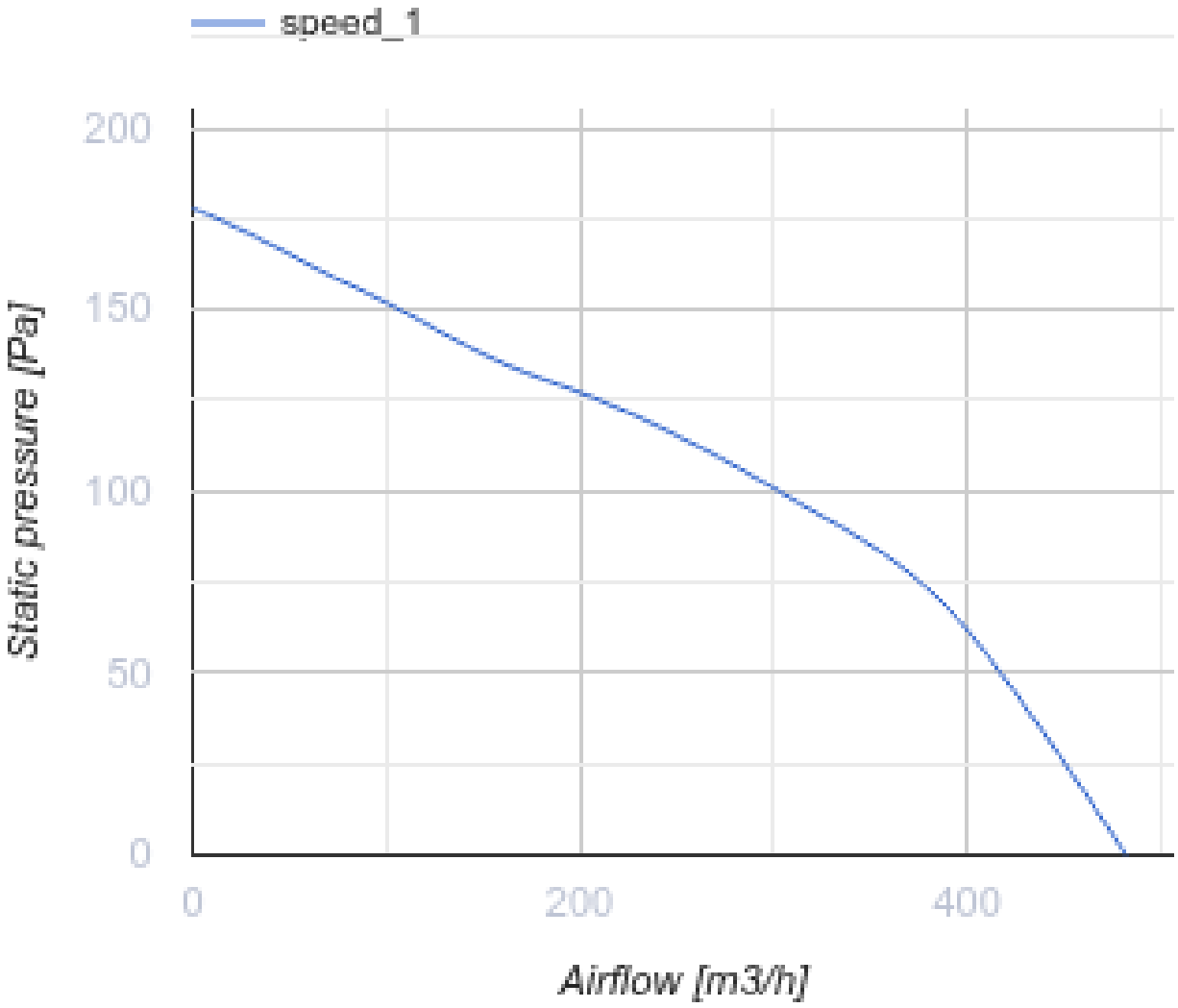
speed_1
200
150
100
50
0
Static pressure [Pa]
0
200
400
Airflow [m3/h]

Dimensions

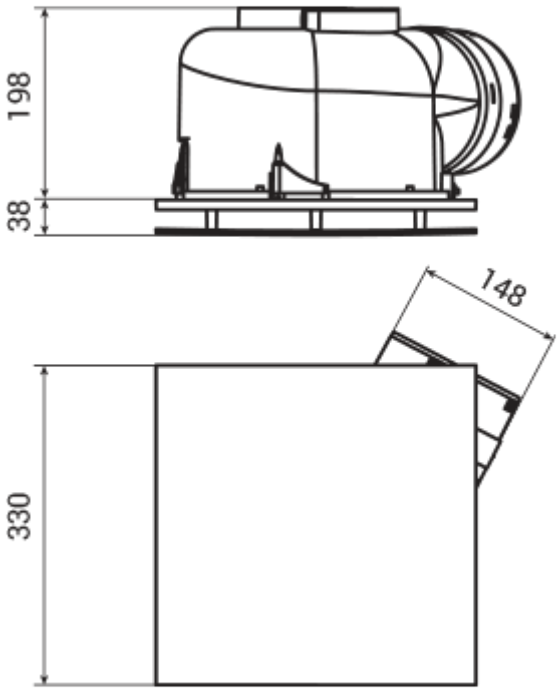

Accessories

Speed controllers

Name	Photo	Description
RS-1-0,5		Used in ventilation systems for switching on/off and speed control of single-phase fan motors with voltage control

Plastic

Name	Photo	Description
MV 150 V		Two-piece plastic grilles with angled louvers, round flange

Other accessories

Name	Photo	Description
MV 152 V ASA		Supply and exhaust hoods