HBF 250 Square TH

HBF is a series of design ceiling exhaust fans from VENTS, the world`s leader in domestic ventilation. A variety of universal decorative panels is the final touch of ventilation in your interior design

- Maximum airflow: 482
- Sound pressure level LpA at 3 m: 36
- Backdraft protection: Backdraft damper
- Humidity sensor
- Timer: Turn off timer

	Unit of measurement	HBF 250 Square TH
Speed	-	1
Minimum supply voltage	V	220
Maximum supply voltage	V	240
Power supply frequency	Hz	50
Rated power	W	57
Unit current	A	0.25
Maximum airflow	m^3/h	482
rotation speed at 50hz	-	1085
Sound pressure level LpA at 3 m	dB(A)	36
Ingress protection rating	-	IPX4

Dimensions

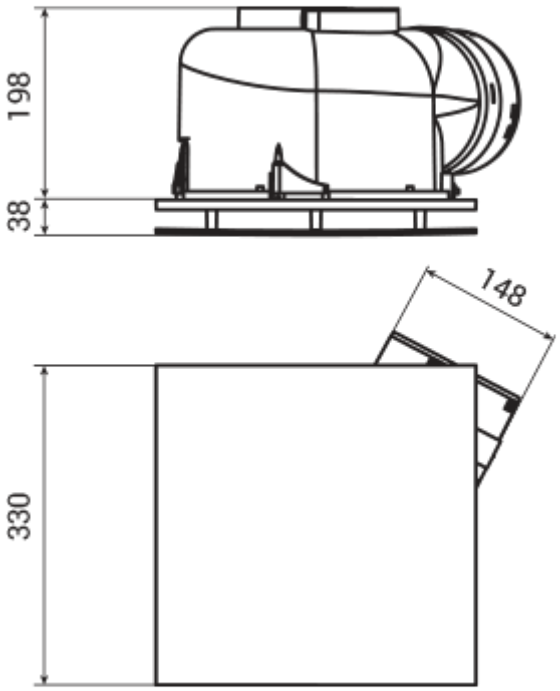

Accessories

Speed controllers

Name	Photo	Description
RS-1-0,5		Used in ventilation systems for switching on/off and speed control of single-phase fan motors with voltage control

Other accessories

Name	Photo	Description
MV 152 V ASA		Supply and exhaust hoods

Other accessories

Name	Photo	Description
MV 150 V		Supply and exhaust plastic grilles