KAM 150 (KFK)



Chimney fans

- Sound pressure level LpA at 3 m: 42
- Casing material: Galvanized steel

	Unit of measurement	KAM 150 (KFK)
Phases	-	1
Minimum supply voltage	V	230
Maximum supply voltage	V	230
Power supply frequency	Hz	50
Rated power	W	115
Unit current	A	0.84
Maximum airflow	m³/h	520
Sound pressure level LpA at 3 m	dB(A)	42
Weight	kg	9.7
Transported air temperature (max)	°C	150
Ingress protection rating	-	IPX2
Size	mm	150

Dimensions

ØD	B	H	H1	L	P
149	285	650	600	300	50

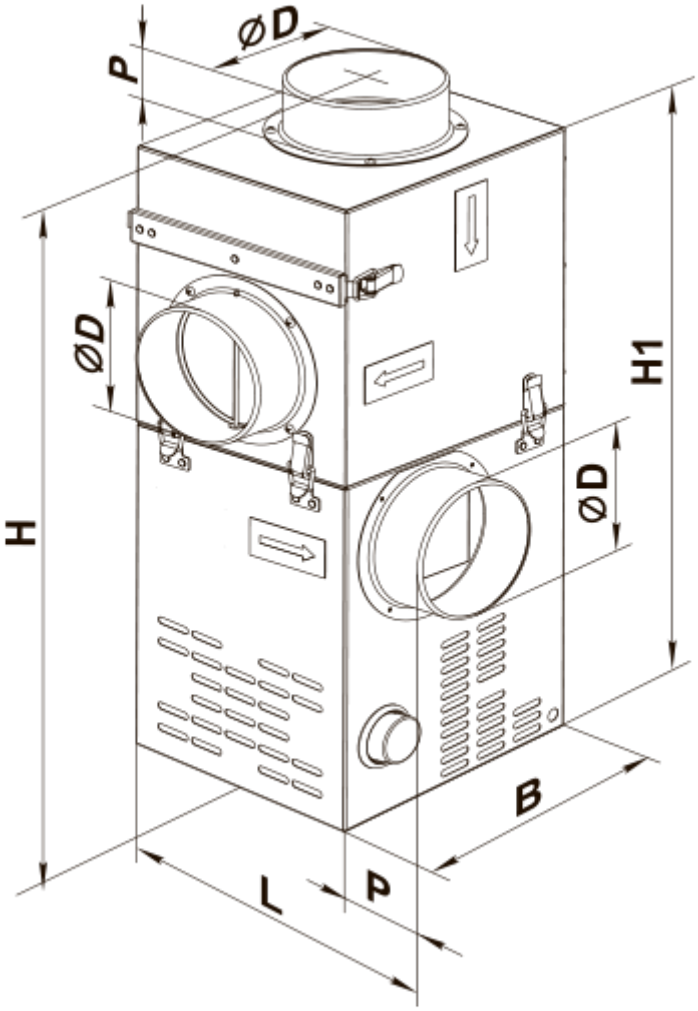

Accessories

Thyristor speed controllers

Name	Photo	Description
RS-1-400		Speed controller
RS-3,0-T		Applied in ventilation systems for speed switching ON/OFF and speed control of single-phase power-controlled motors
RS-5,0-T		Applied in ventilation systems for speed switching ON/OFF and speed control of single-phase power-controlled motors
RS-3,0-TA		Applied in ventilation systems for switching ON/OFF and speed controlling of single-phase power-controlled motors
RS-5,0-TA		Applied in ventilation systems for switching ON/OFF and speed controlling of single-phase power-controlled motors

Speed controllers

Name	Photo	Description
RS-1,5-PS		Used in ventilation systems for switching on/off and speed control of single-phase fan motors with voltage control
RS-2,5-PS		Used in ventilation systems for switching on/off and speed control of single-phase fan motors with voltage control
RS-4,0-PS		Used in ventilation systems for switching on/off and speed control of single-phase fan motors with voltage control

Transformer speed controllers

Name	Photo	Description
RSA5E-2-P		Speed control enables selection of the ventilation mode for periodically occupied premises
RSA5E-2-M		Speed controls enable selection of the ventilation mode for periodically occupied premises
RSA5E-3-M		Speed controls enable selection of the ventilation mode for periodically occupied premises
RSA5E-4-M		Speed controls enable selection of the ventilation mode for periodically occupied premises
RSA5E-3,5-T		Speed controllers are applied for air flow control of single phase fans by means of motor step speed control
RSA5E-5,0-T		Speed controllers are applied for air flow control of single phase fans by means of motor step speed control

Sensors

Name	Photo	Description
TH-1,5 N		Humidity / light / motion sensors, timers
T-1,5 N		Humidity / light / motion sensors, timers
TF-1,5 N		Humidity / light / motion sensors, timers

TP-1,5 N		Humidity / light / motion sensors, timers

Temperature regulators

Name	Photo	Description
RT-10		Temperature regulator

Temperature controllers

Name	Photo	Description
TS-1-90		External temperature controller for chimney fans

Fittings

Name	Photo	Description
C 150		The clamps are designed for quick and reliable mounting and connection of various round ventilation system components. Clamps are made of stainless steel band
CB 60-165		The clamps are designed for quick and reliable mounting and connection of various round ventilation system components. Clamps are the stainless steel quick-release clamps equipped with a stainless steel swing screw