KDT-MK 200

Duct temperature sensors with a terminal box

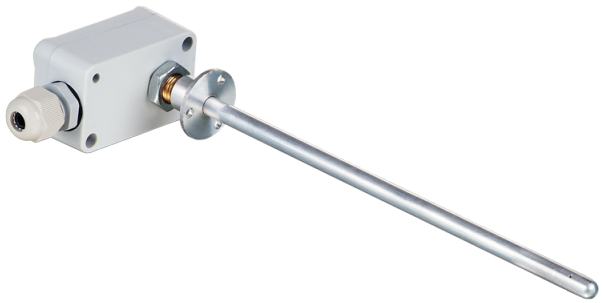

	Unit of measurement	KDT-MK 200
Maximum supply voltage	V	5
Ambient air temperature min	°C	-30
Ambient air temperature max	°C	60
Ingress protection rating	-	IP54

Dimensions

L
200

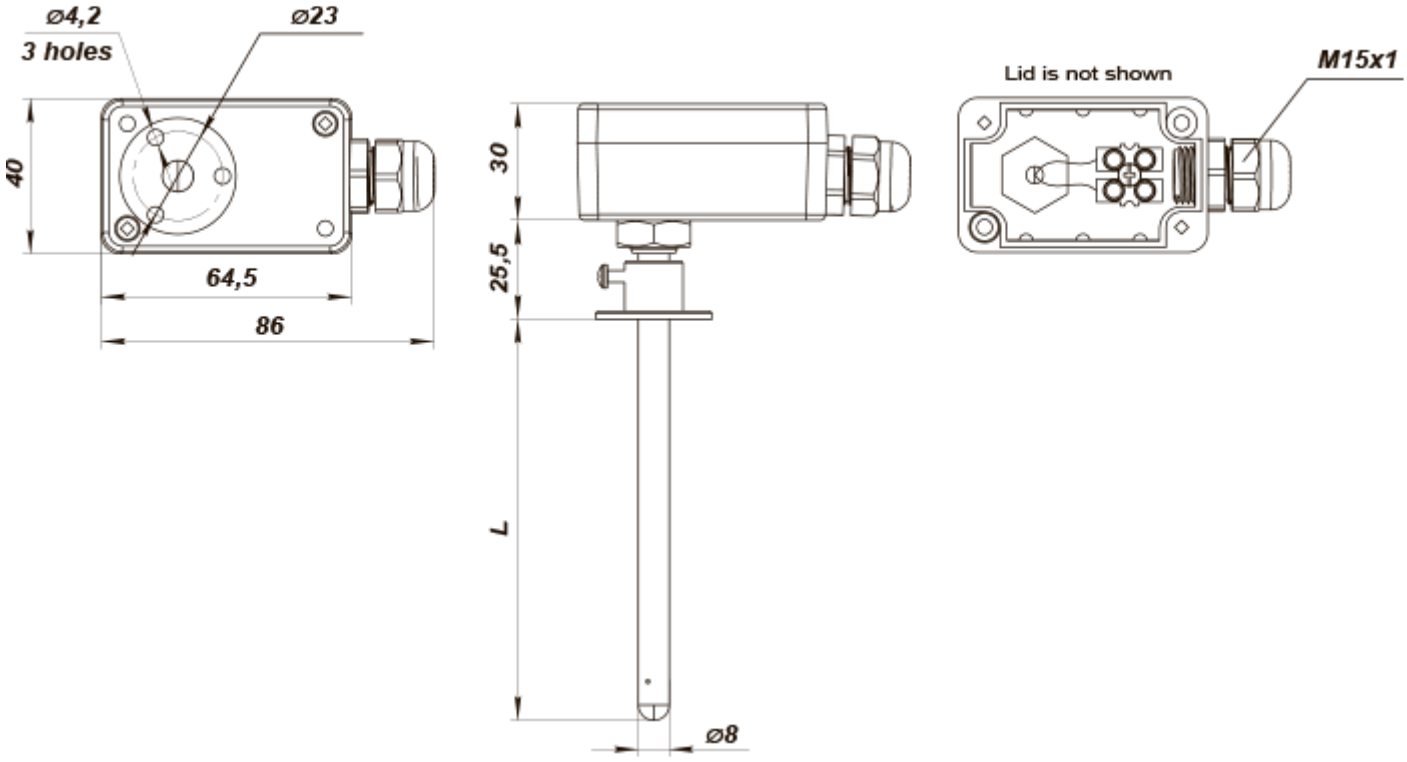
ø4,2
3 holes
ø23
40
64,5
86
30
25,5
L
ø8
Lid is not shown
M15x1