KG 400x200

Gravity valve for automatic airflow shut-off in round air ducts

- Casing material: Galvanized steel

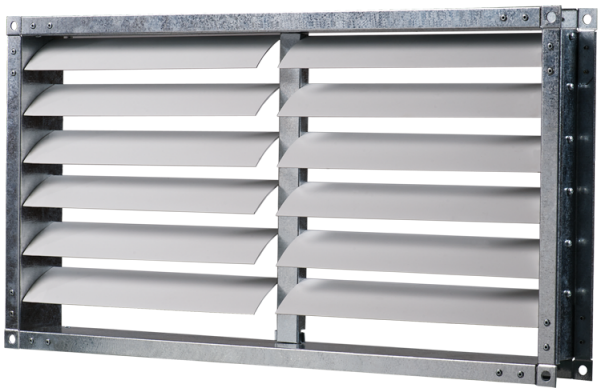

	Unit of measurement	KG 400x200
Weight	kg	1.29

Dimensions

B	B1	B2	H	H1	H2
400	420	440	200	220	240

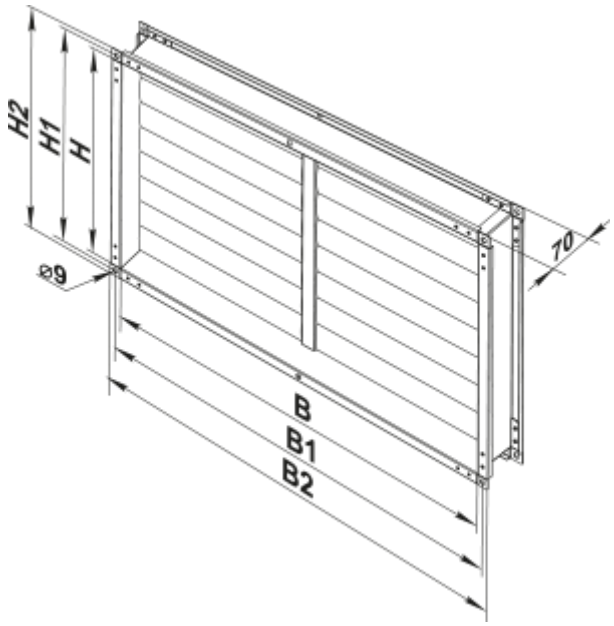
H2
H1
H
⌀9
70
B
B1
B2