KG 500x250

Gravity valve for automatic airflow shut-off in round air ducts

- Casing material: Galvanized steel

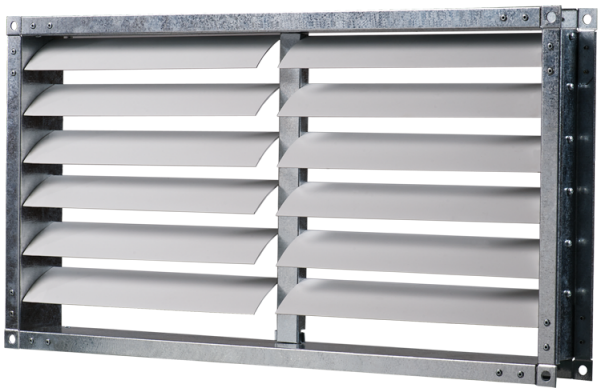

	Unit of measurement	KG 500x250
Weight	kg	1.58

Dimensions

B	B1	B2	H	H1	H2
500	520	540	250	270	290

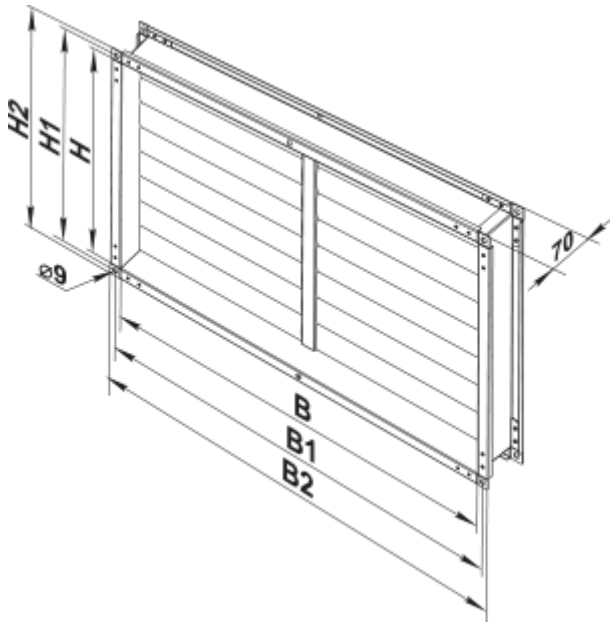
H2
H1
H
⌀9
70
B
B1
B2