KG 500x300

Gravity valve for automatic airflow shut-off in round air ducts

- Casing material: Galvanized steel

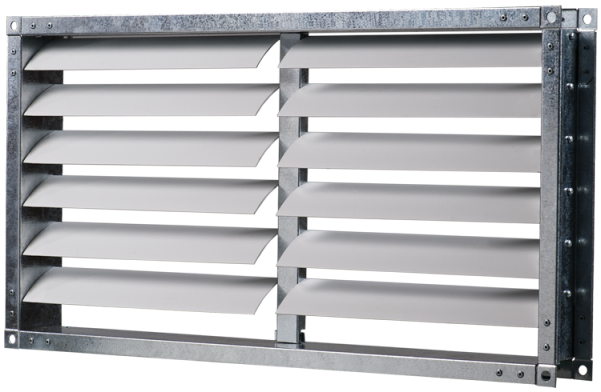

	Unit of measurement	KG 500x300
Weight	kg	1.83

Dimensions

B	B1	B2	H	H1	H2
500	520	540	300	320	340

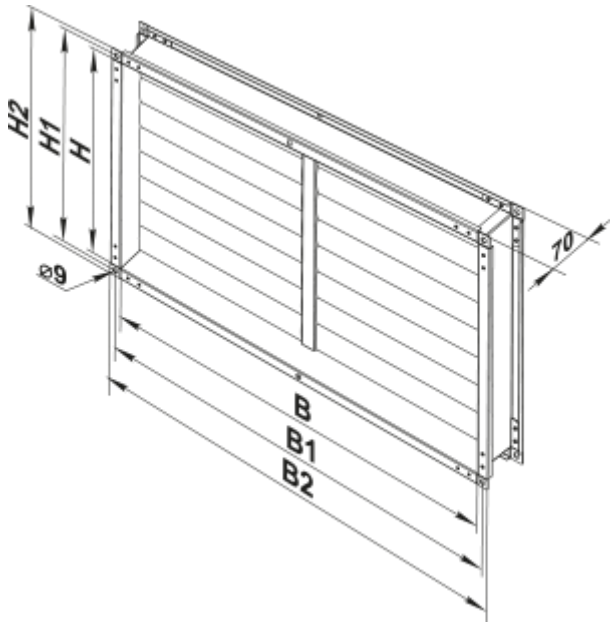
H2
H1
H
⌀9
70
B
B1
B2