KG 800x500

Gravity valve for automatic airflow shut-off in round air ducts

- Casing material: Galvanized steel

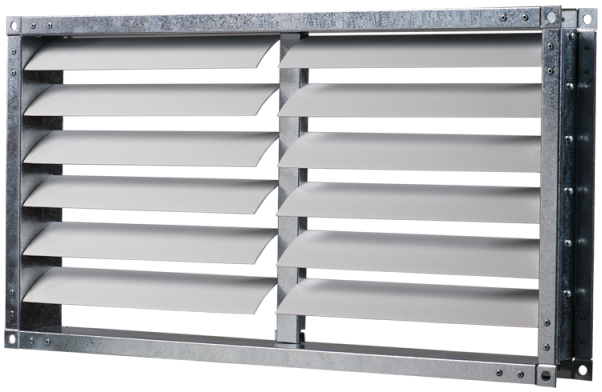

	Unit of measurement	KG 800x500
Weight	kg	3.6

Dimensions

B	B1	B2	H	H1	H2
800	820	840	500	520	540

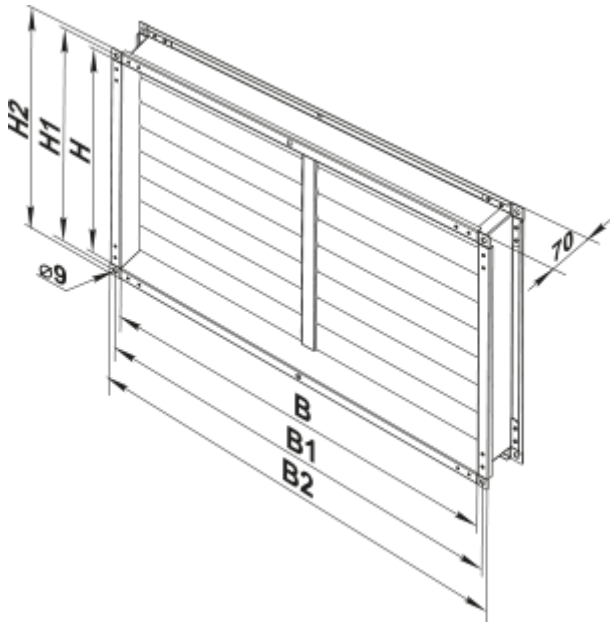
H2
H1
H
⌀9
70
B
B1
B2