KNTK-100

Excess pressure valve

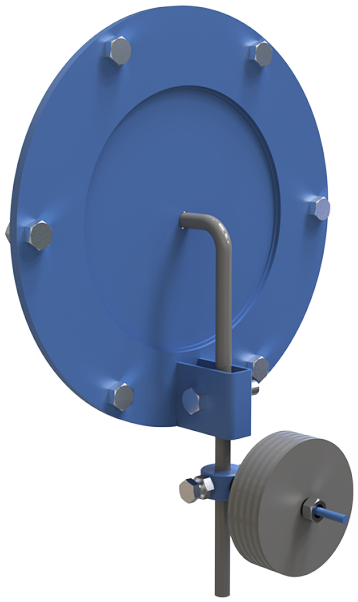

	Unit of measurement	KNTK-100
Connected air duct size	mm	100
Weight	kg	3.6

Dimensions

ØD	ØD1	d	L	H
100	200	12	325	167.5

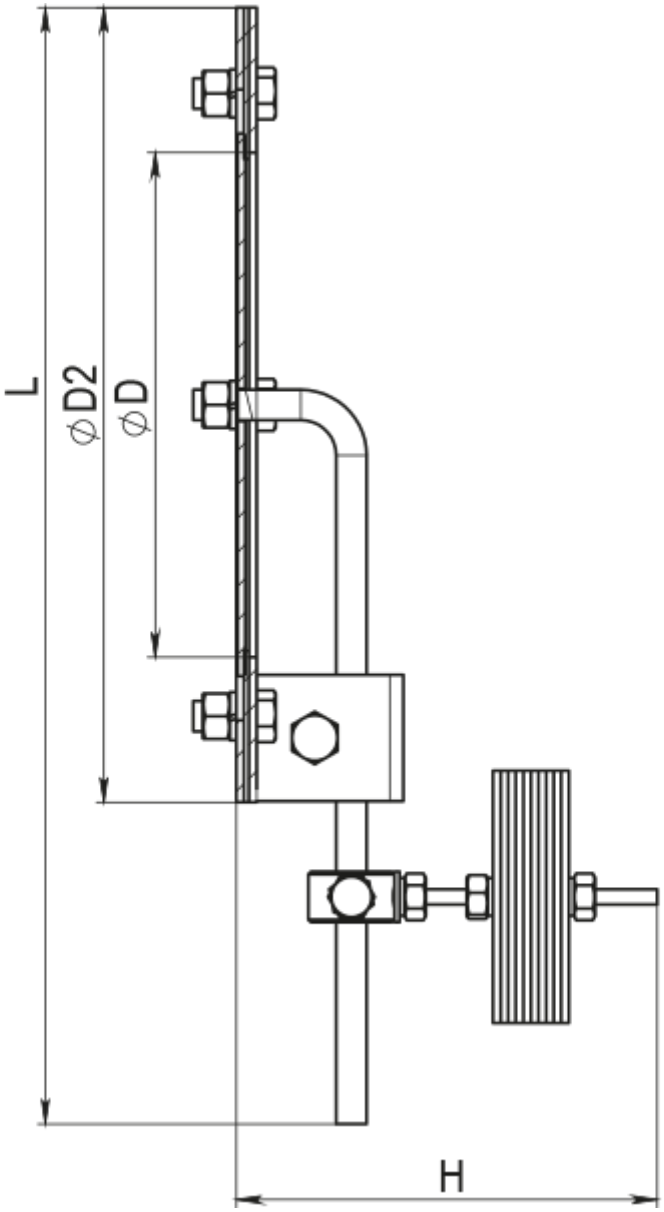
L
⌀D2
⌀D
H

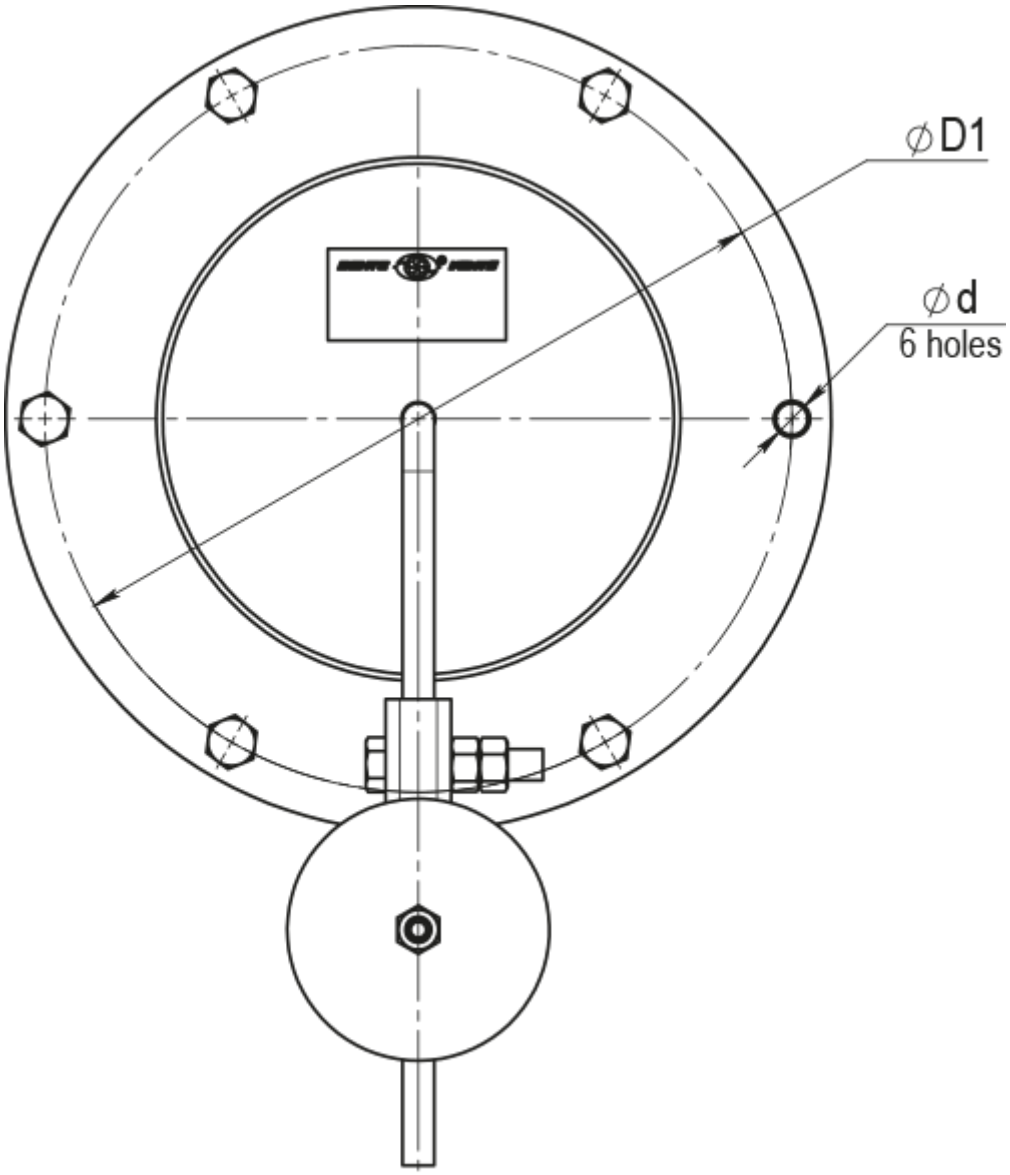
∅D1
∅d
6 holes