KNTK-150

Excess pressure valve

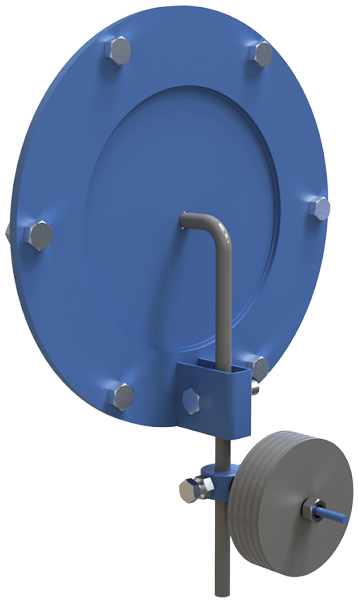

	Unit of measurement	KNTK-150
Connected air duct size	mm	150
Weight	kg	4.1

Dimensions

ØD	ØD1	d	L	H
150	237.5	12	367.5	167.5

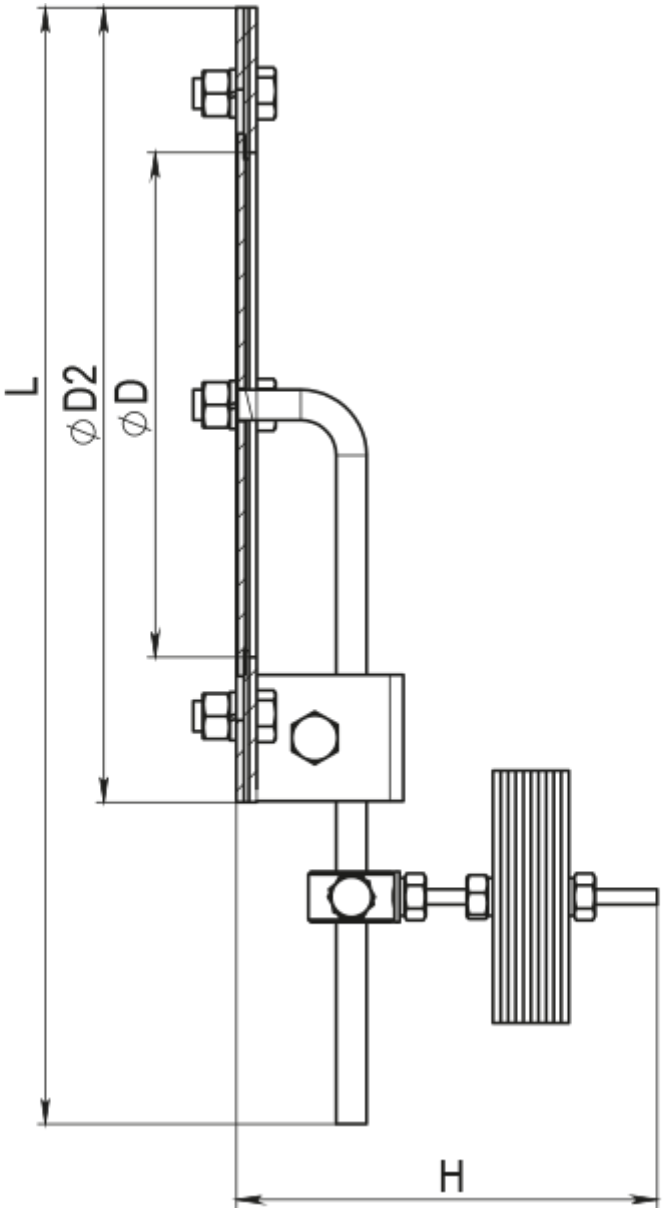
L
⌀D2
⌀D
H

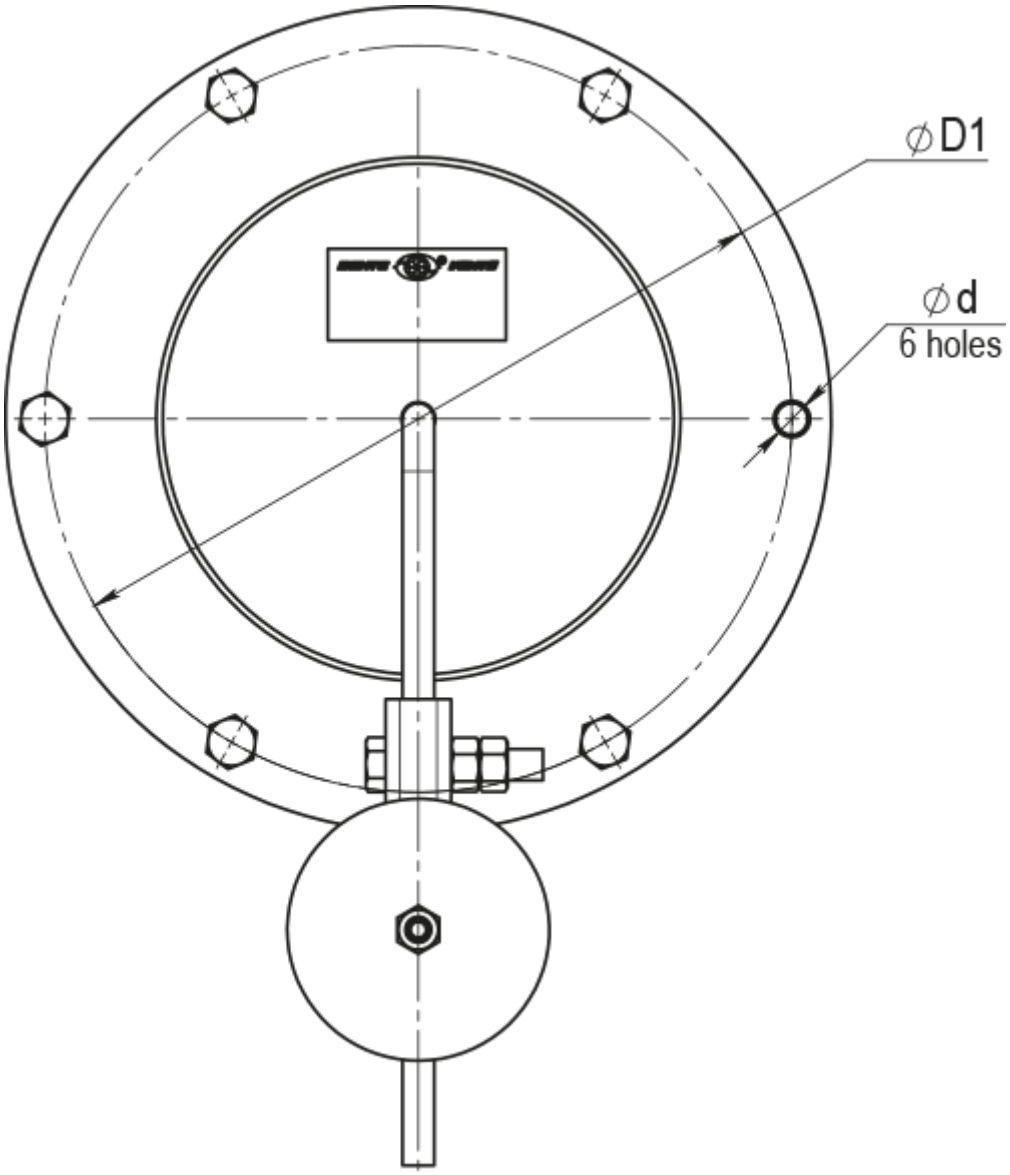
∅D1
∅d
6 holes