KNTK-200

Excess pressure valve

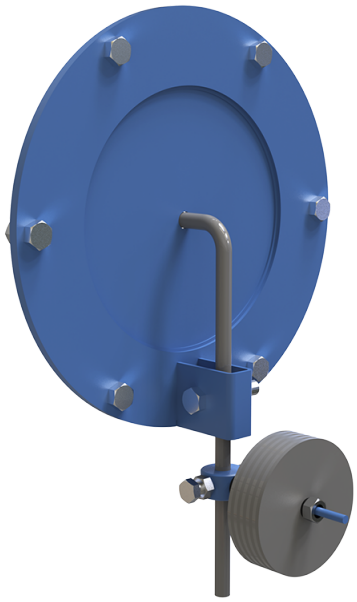

	Unit of measurement	KNTK-200
Connected air duct size	mm	200
Weight	kg	5.5

Dimensions

ØD	ØD1	d	L	H
200	285	14	442.5	166.5

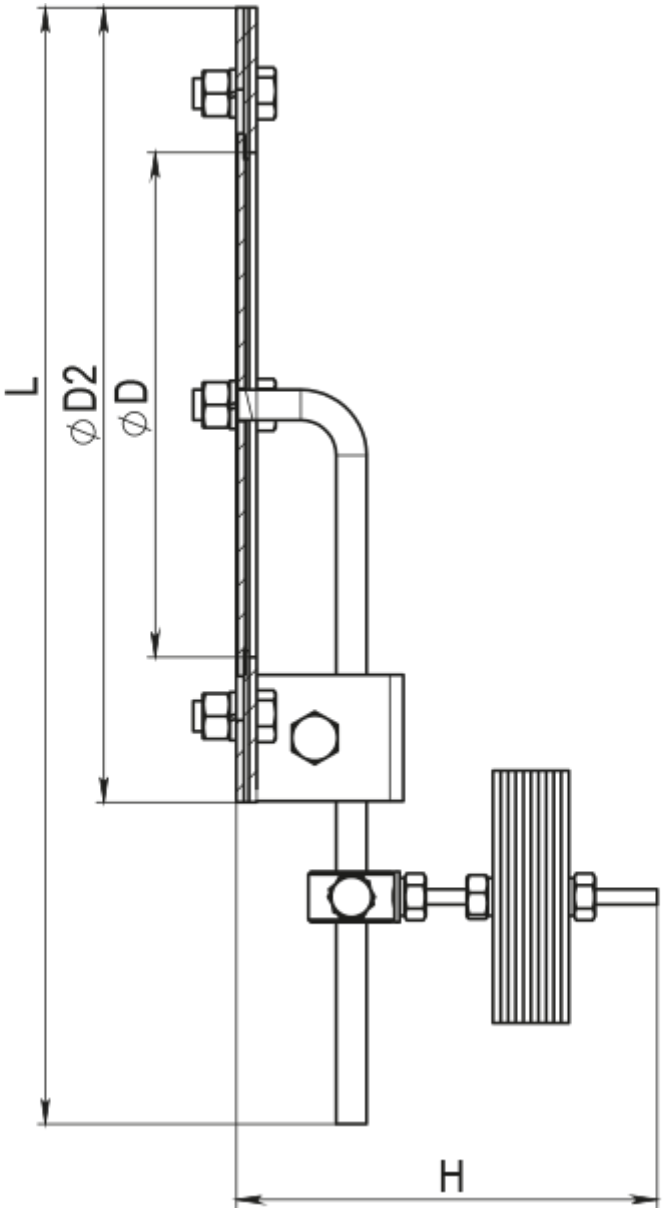
L
⌀D2
⌀D
H

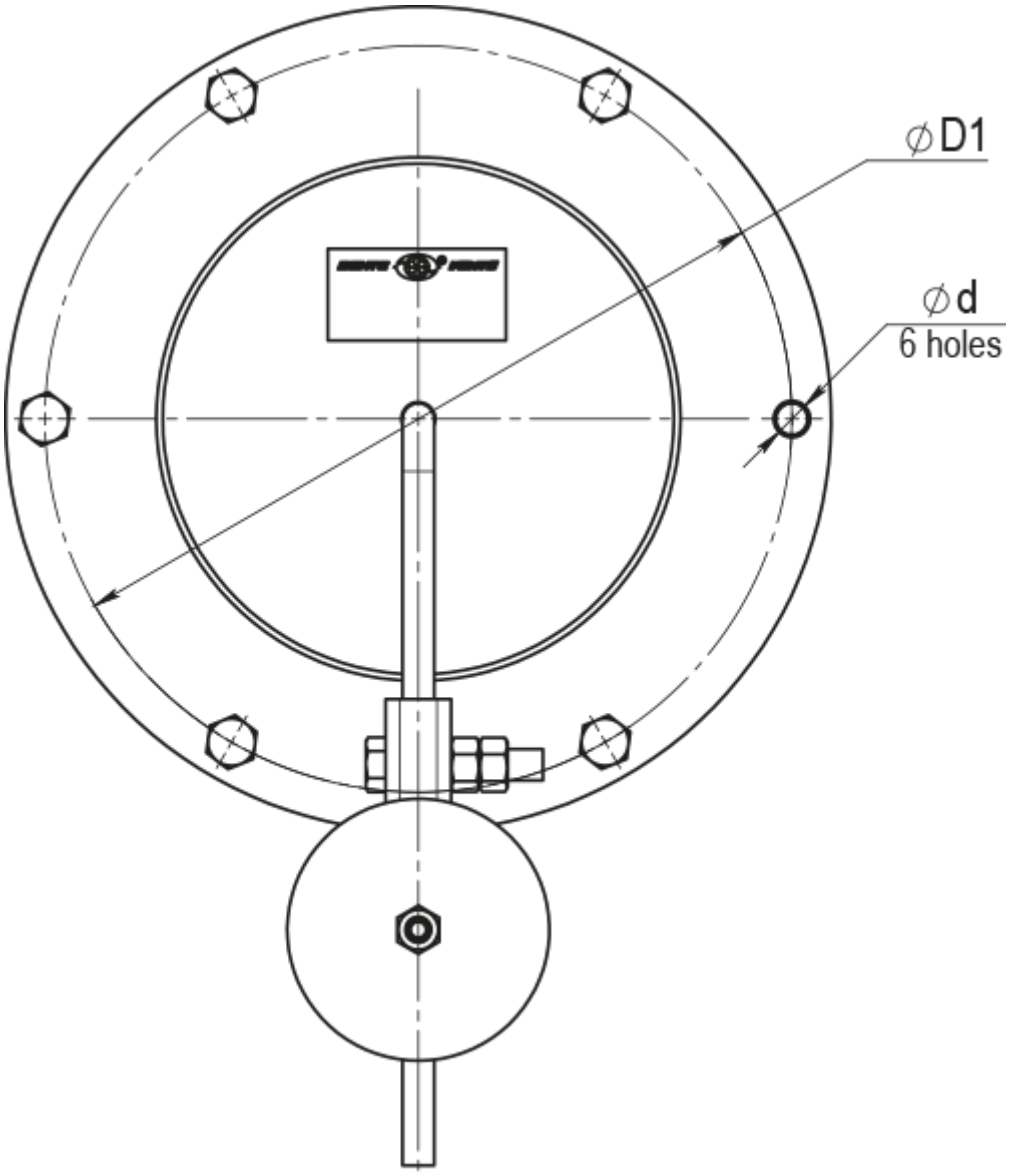
∅D1
∅d
6 holes