KNTK-250

Excess pressure valve

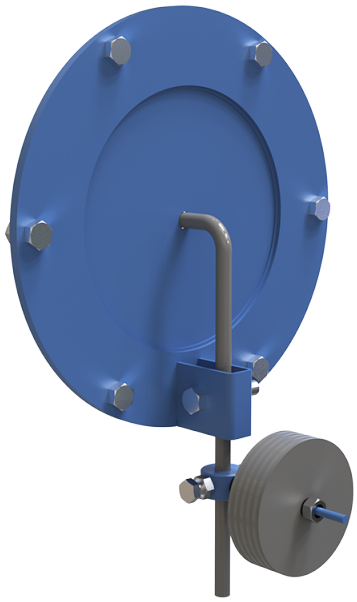

	Unit of measurement	KNTK-250
Connected air duct size	mm	250
Weight	kg	6.6

Dimensions

ØD	ØD1	d	L	H
250	325	14	521	166.5

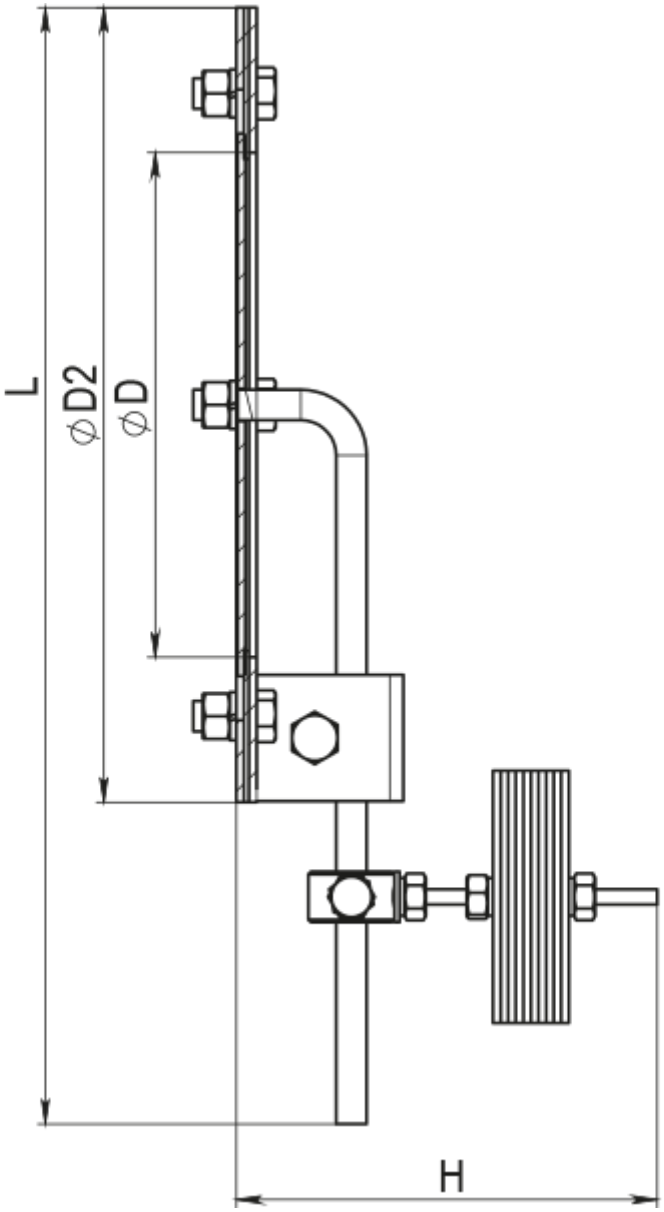
L
⌀D2
⌀D
H

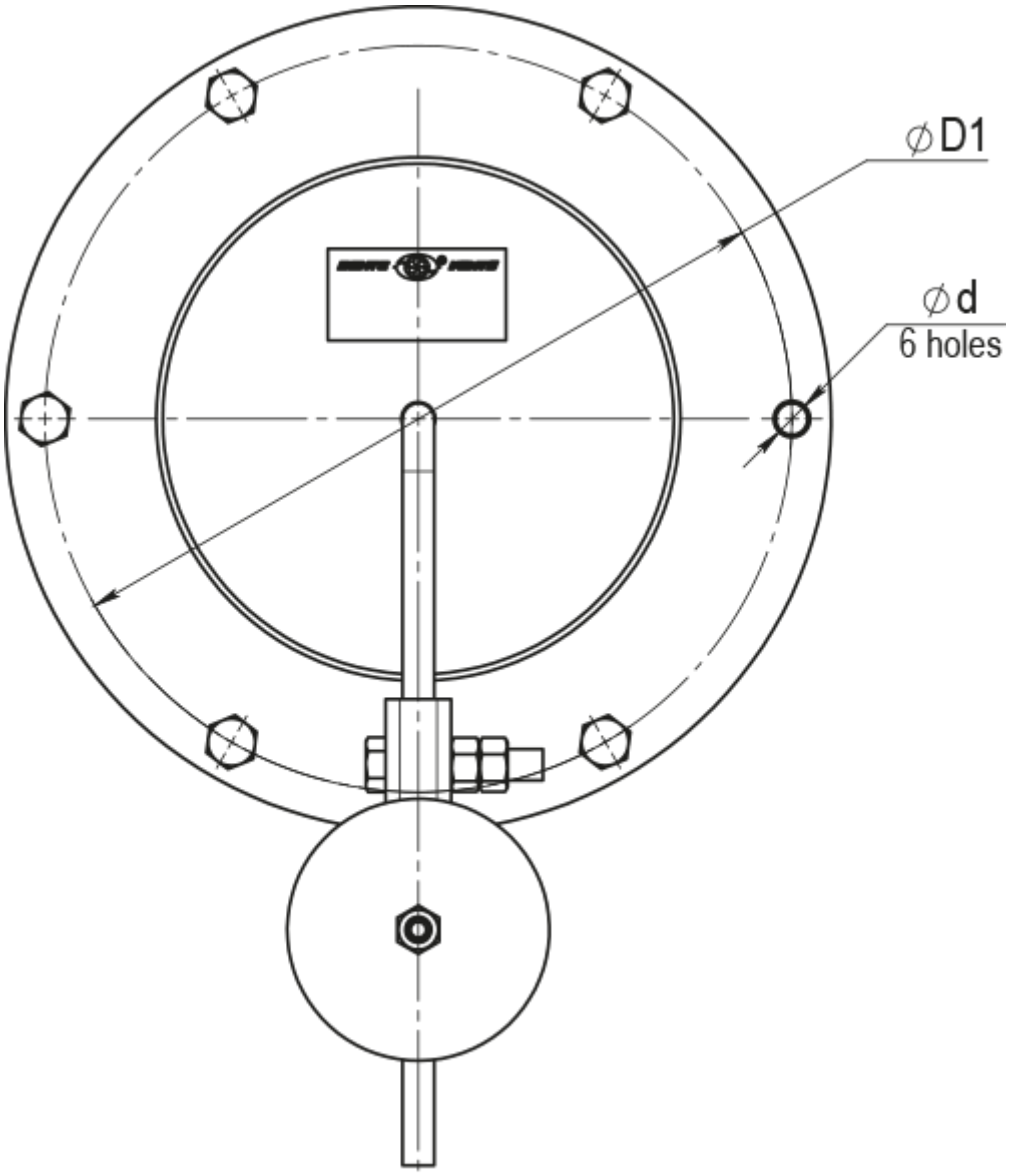
∅D1
∅d
6 holes