KNTK-300

Excess pressure valve

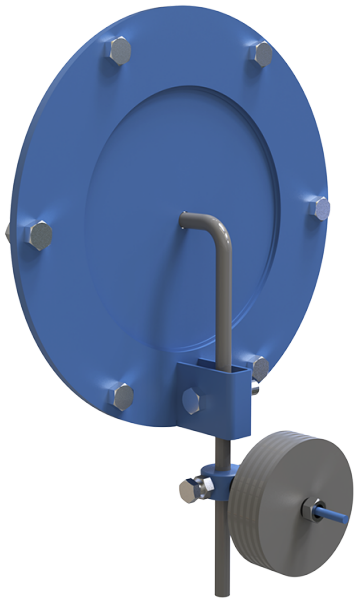

	Unit of measurement	KNTK-300
Connected air duct size	mm	300
Weight	kg	7.8

Dimensions

ØD	ØD1	d	L	H
300	430	14	595	201.5

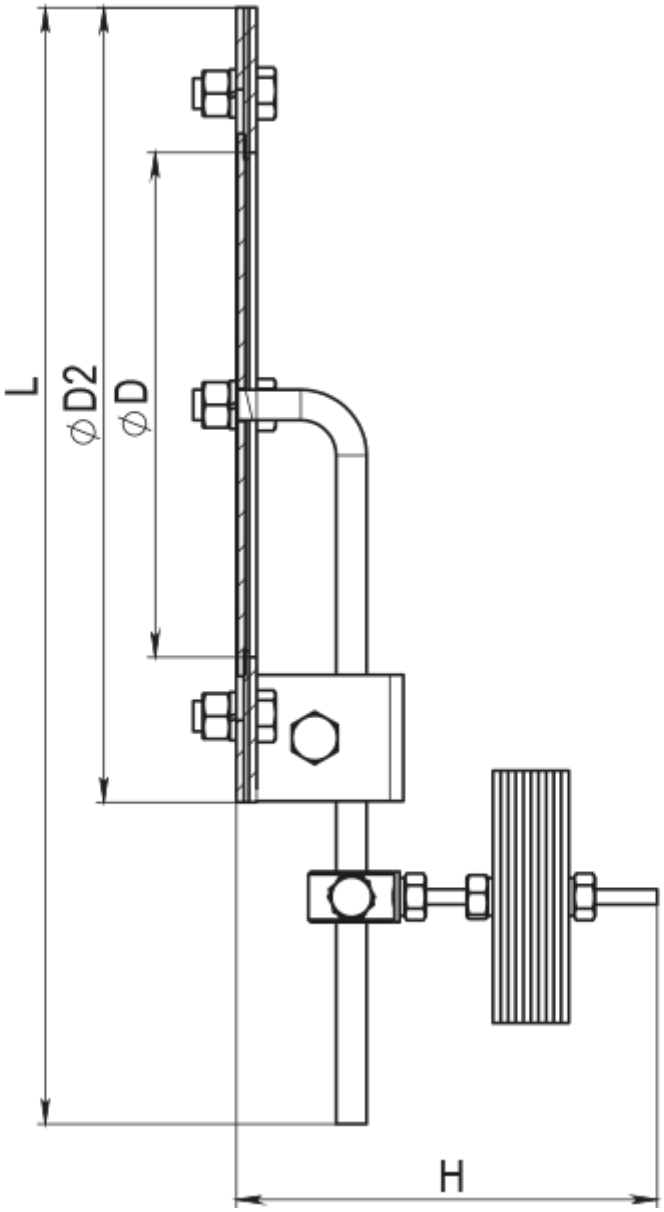
L
⌀D2
⌀D
H

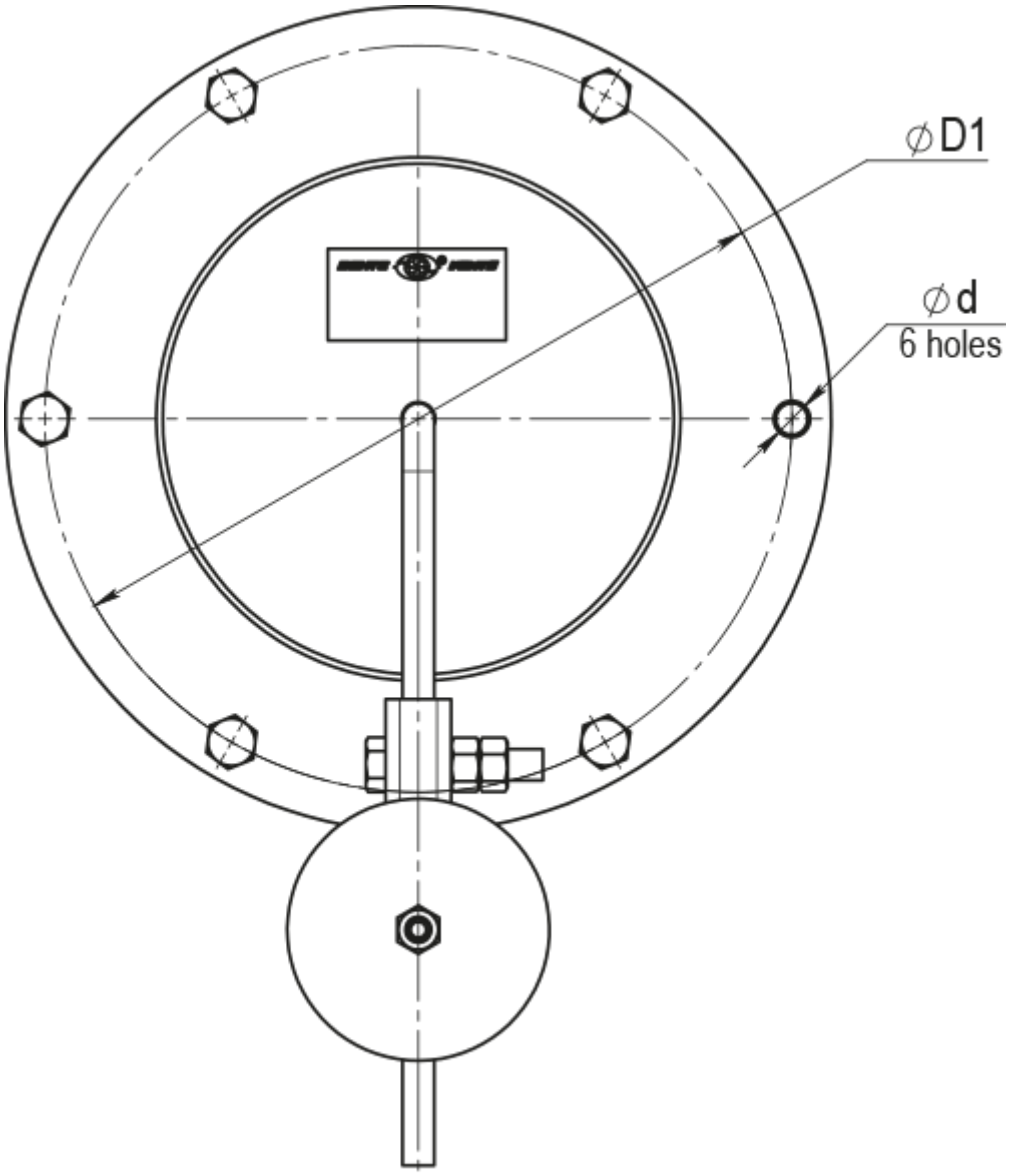
∅D1
∅d
6 holes