KOM1 160



Backdraught gravity damper for shutting off air flow in round air ducts

• Casing material: Galvanized steel

	Unit of measurement	KOM1 160
Connected air duct size	mm	160
Weight	kg	1.06

Dimensions

D	B	L
159	204	190

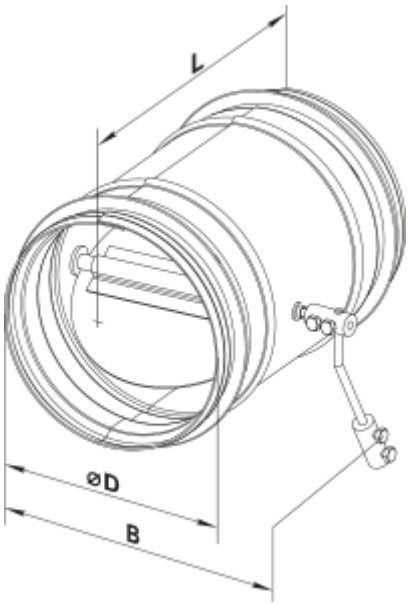
L
ØD
B