KOM1 250



Backdraught gravity damper for shutting off air flow in round air ducts

• Casing material: Galvanized steel

	Unit of measurement	KOM1 250
Connected air duct size	mm	250
Weight	kg	2.2

Dimensions

D	B	L
249	290	270

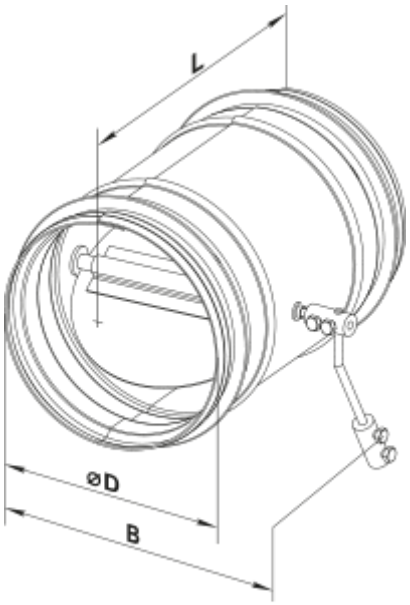
L
ØD
B