KOM1 400x200

Backdraught gravity dampe for shutting off air flow in rectangular air ducts

- Casing material: Galvanized steel

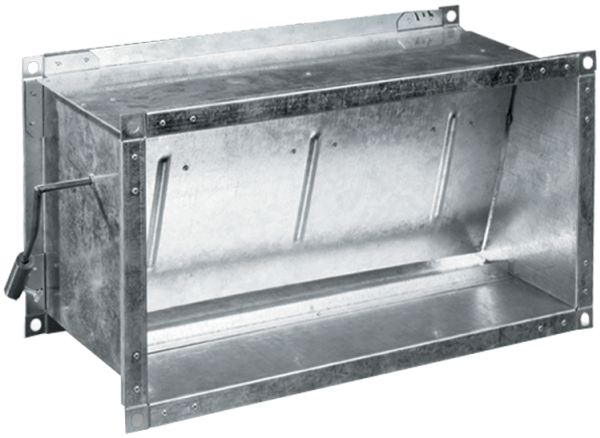

	Unit of measurement	KOM1 400x200
Weight	kg	2.9

Dimensions

B	B1	B2	B3	H	H1	H2	L
400	420	440	461	200	220	240	202

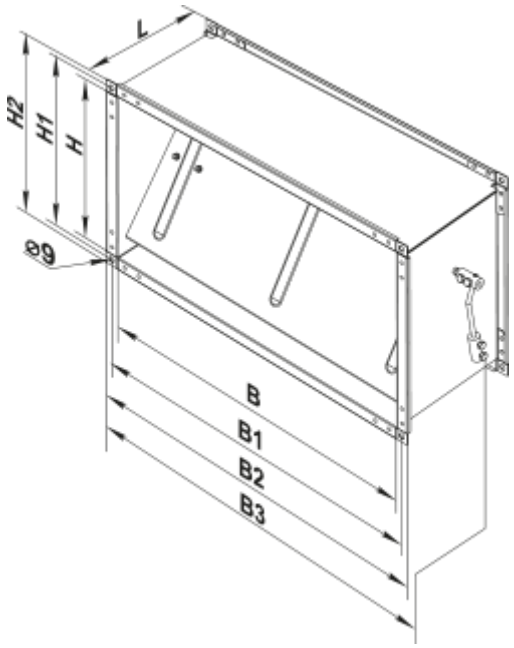
L
H2
H1
H
⌀9
B
B1
B2
B3